Belle II

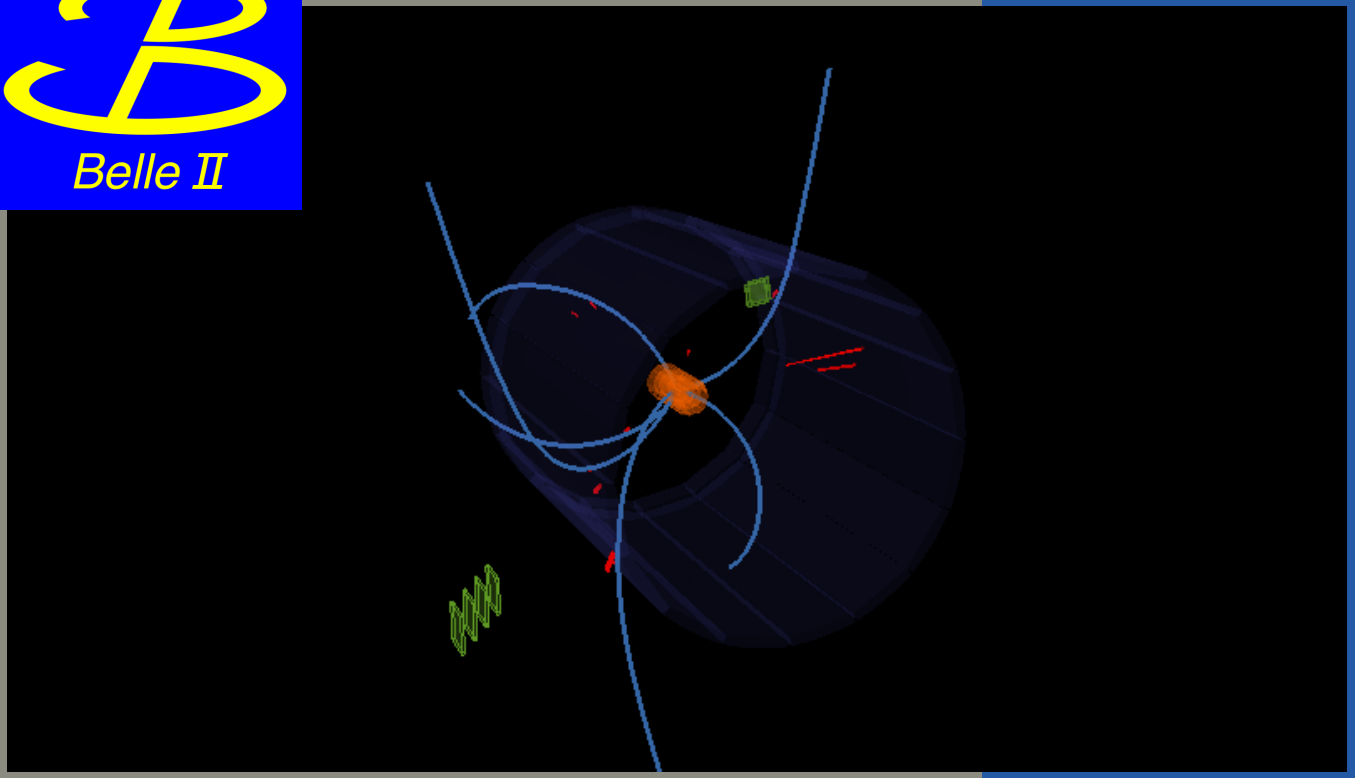

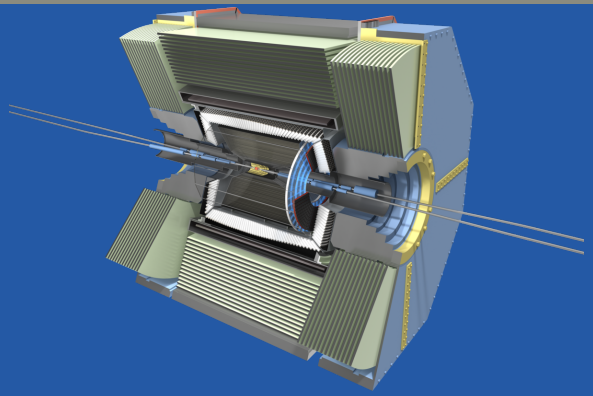

Ereignis 1

$\not{E} = 31.6$

$\nwarrow\!\!\searrow = 0.53$

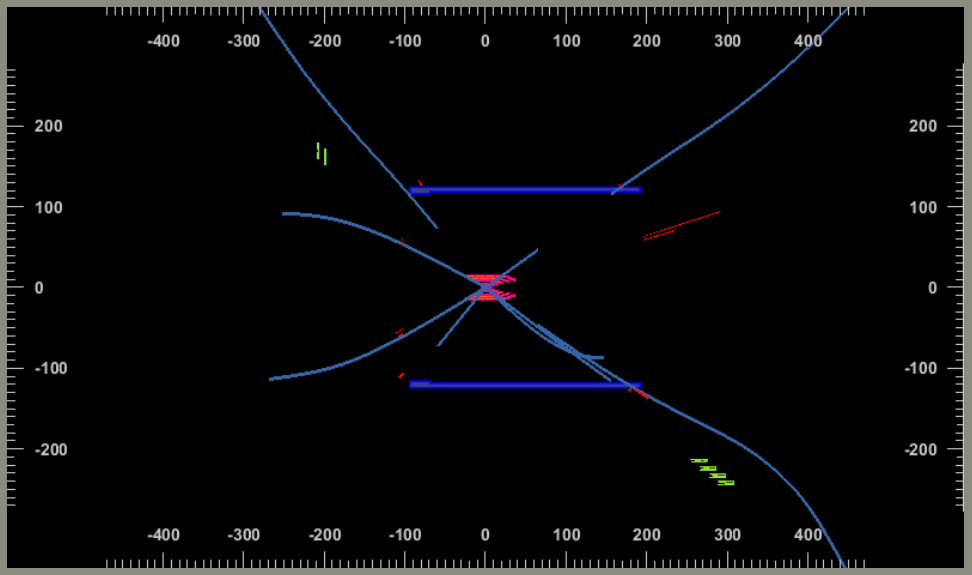

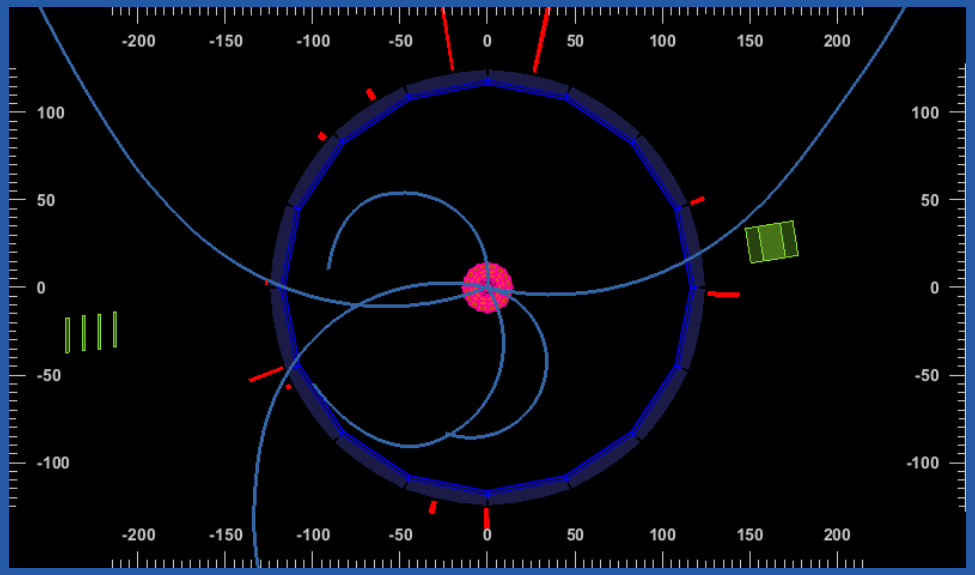

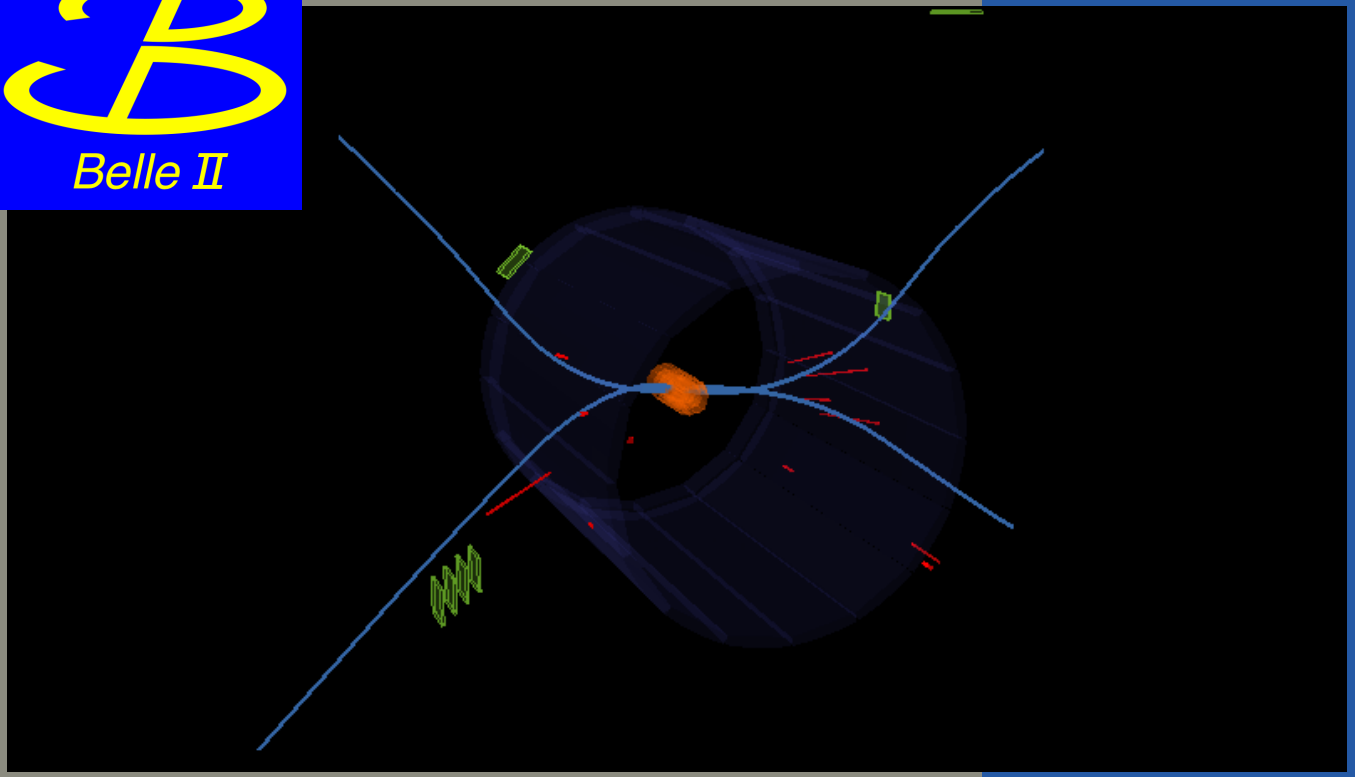

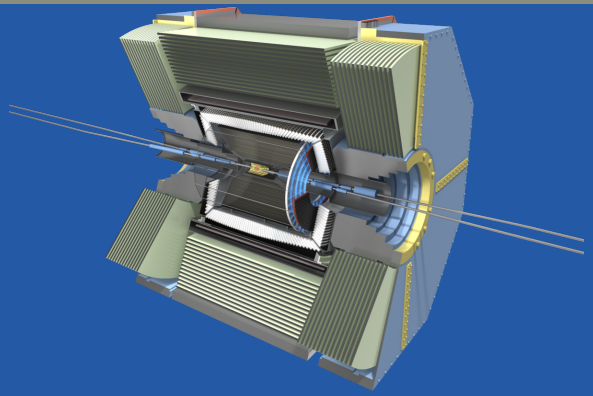

Ereignis 2

$\not{E} = -3.2$

$\nwarrow\!\!\searrow = 0.75$

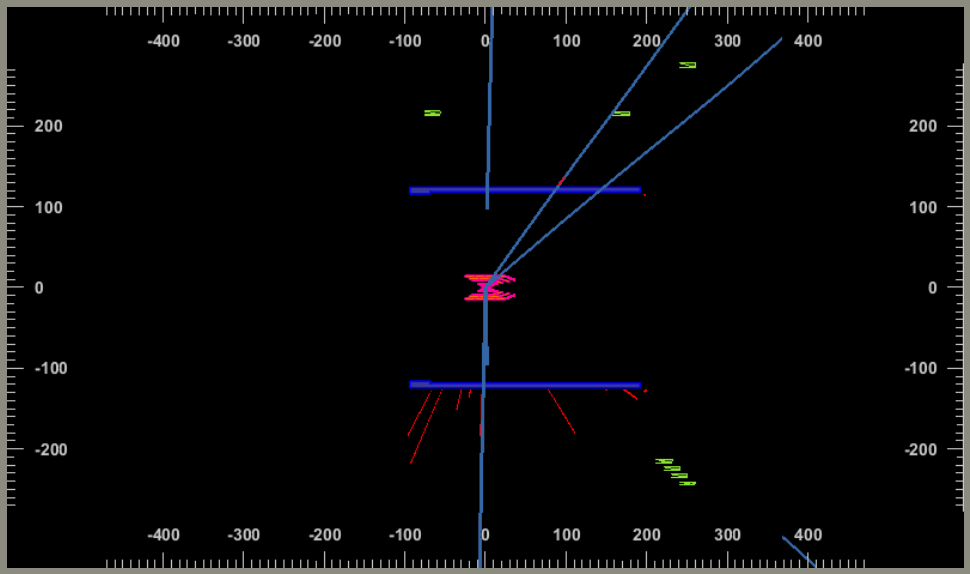

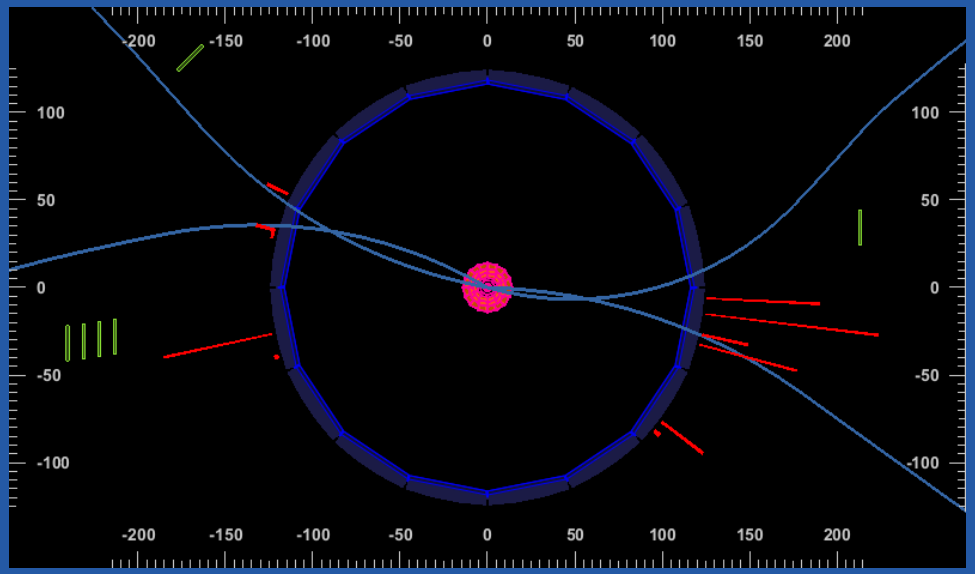

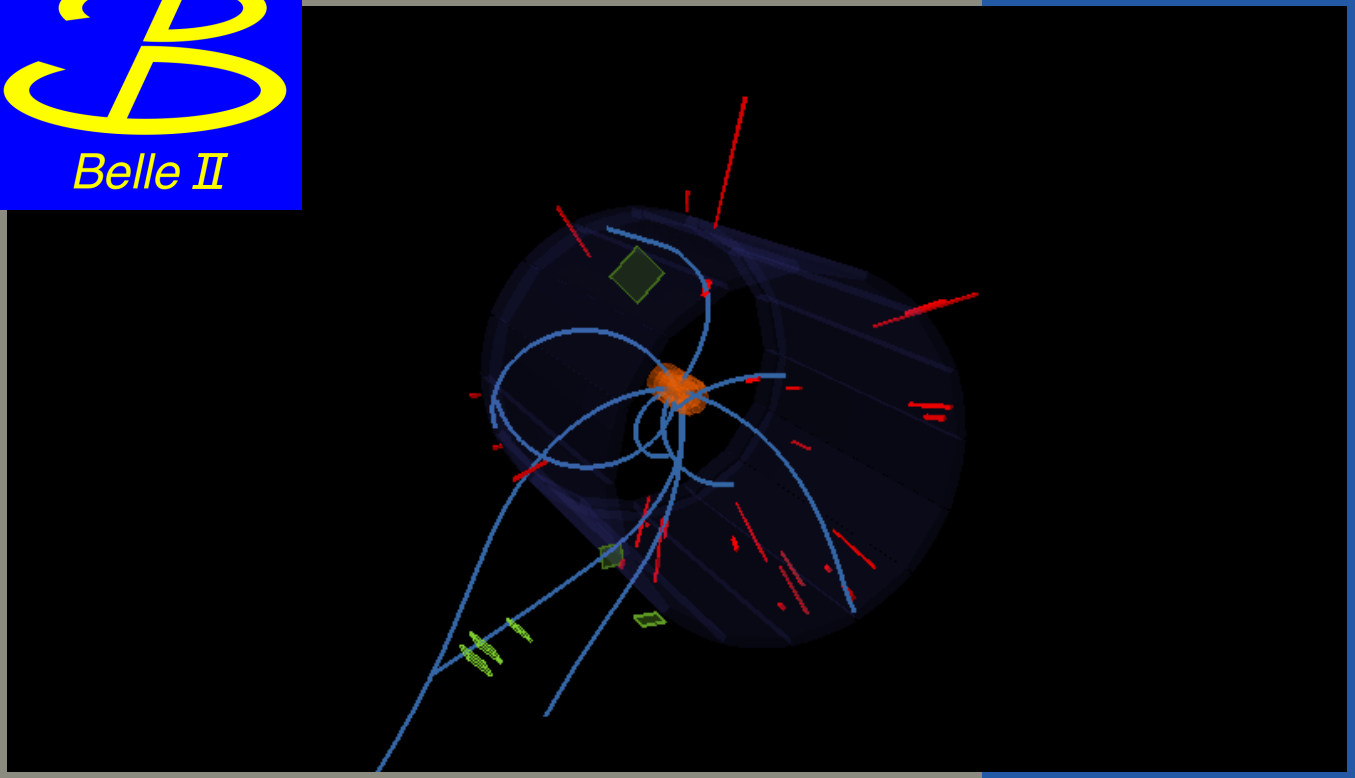

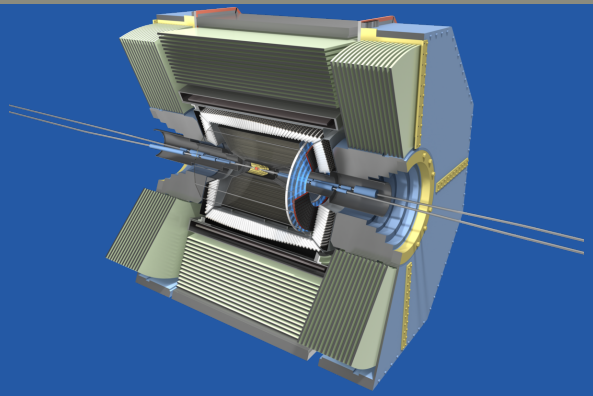

Ereignis 3

$\not{E} = -0.3$

$\nwarrow\!\!\searrow = 0.21$

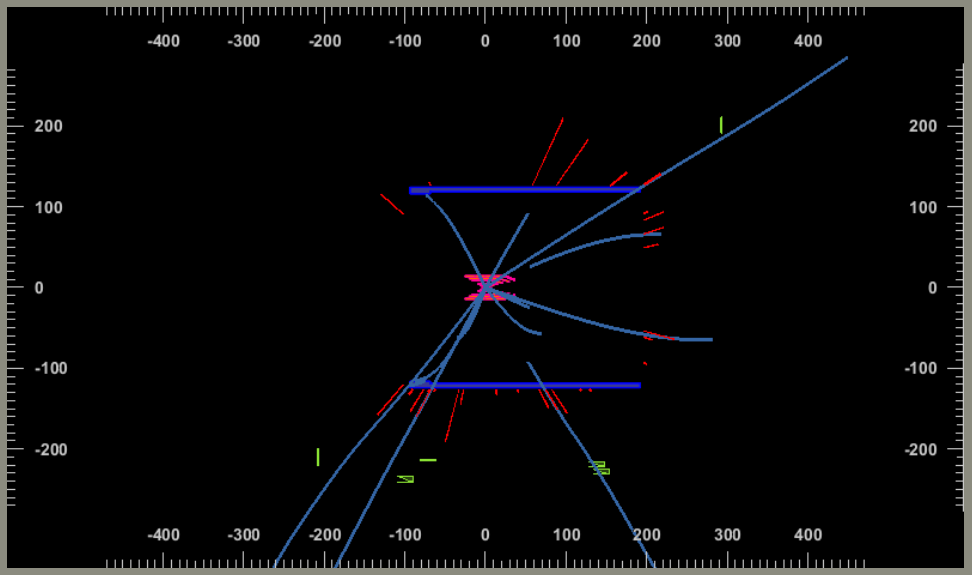

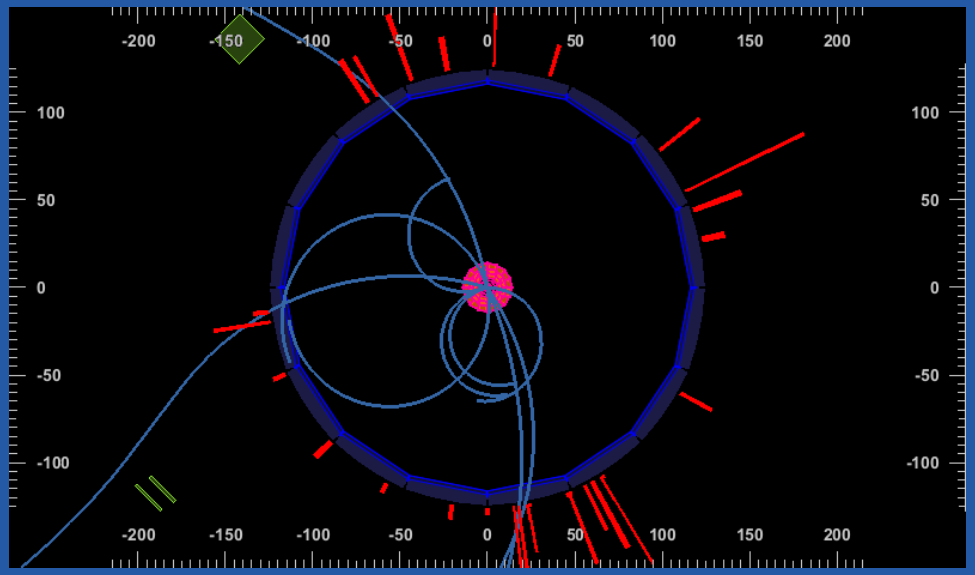

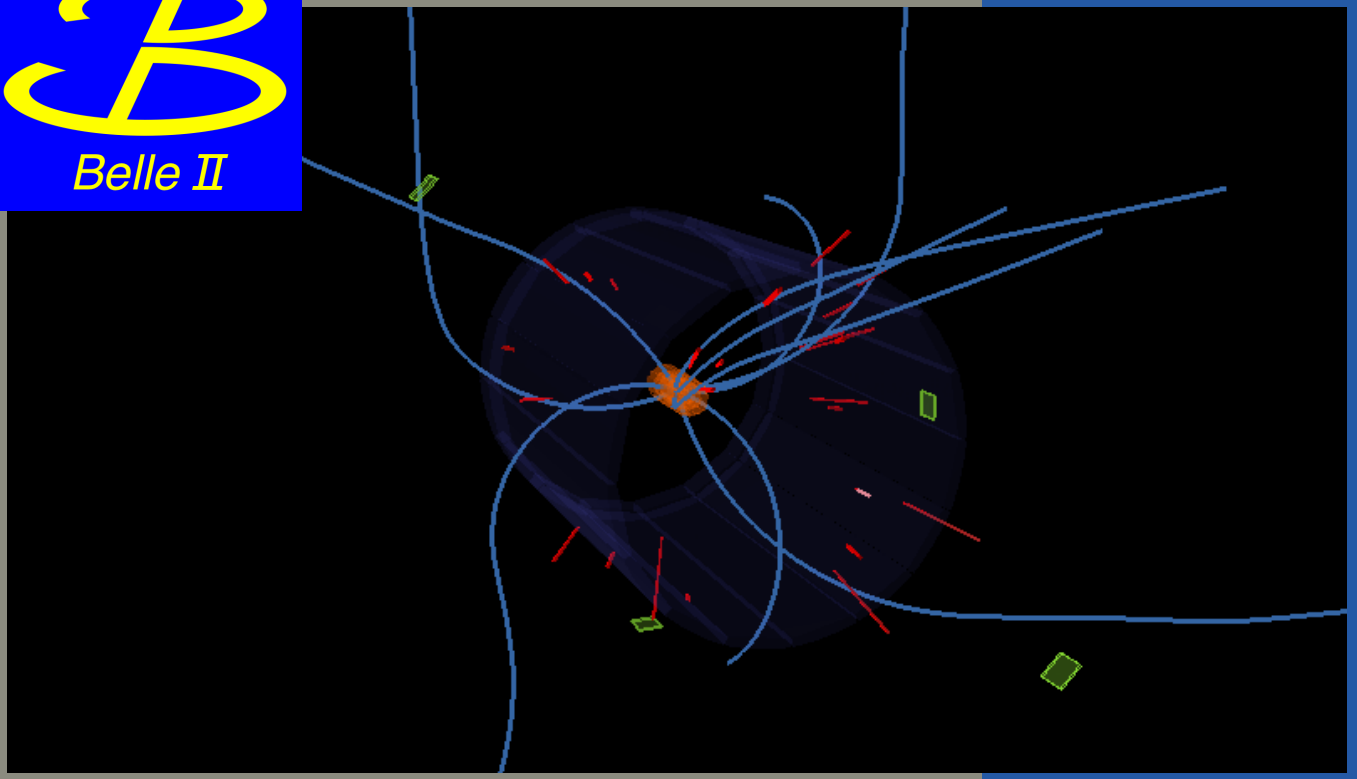

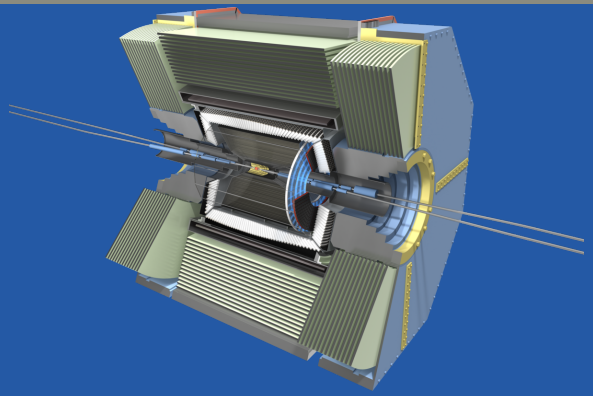

Ereignis 4

$\not{E} = -0.9$

$\nwarrow\!\!\searrow = 0.07$

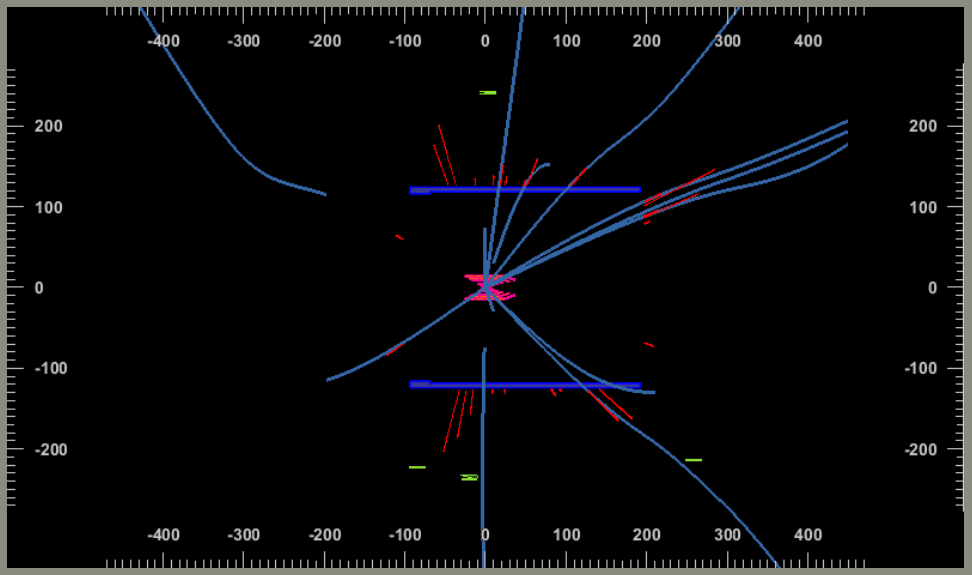

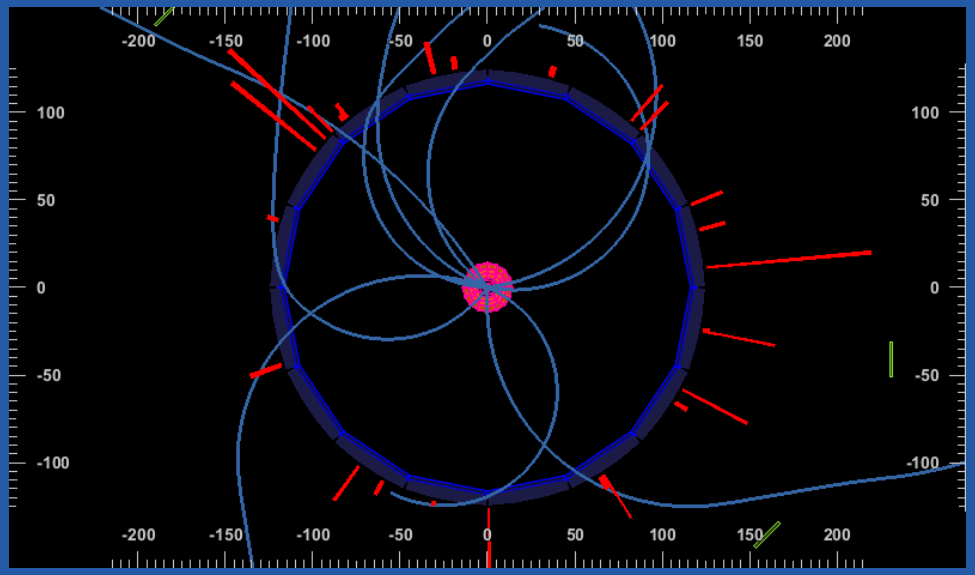

Belle II

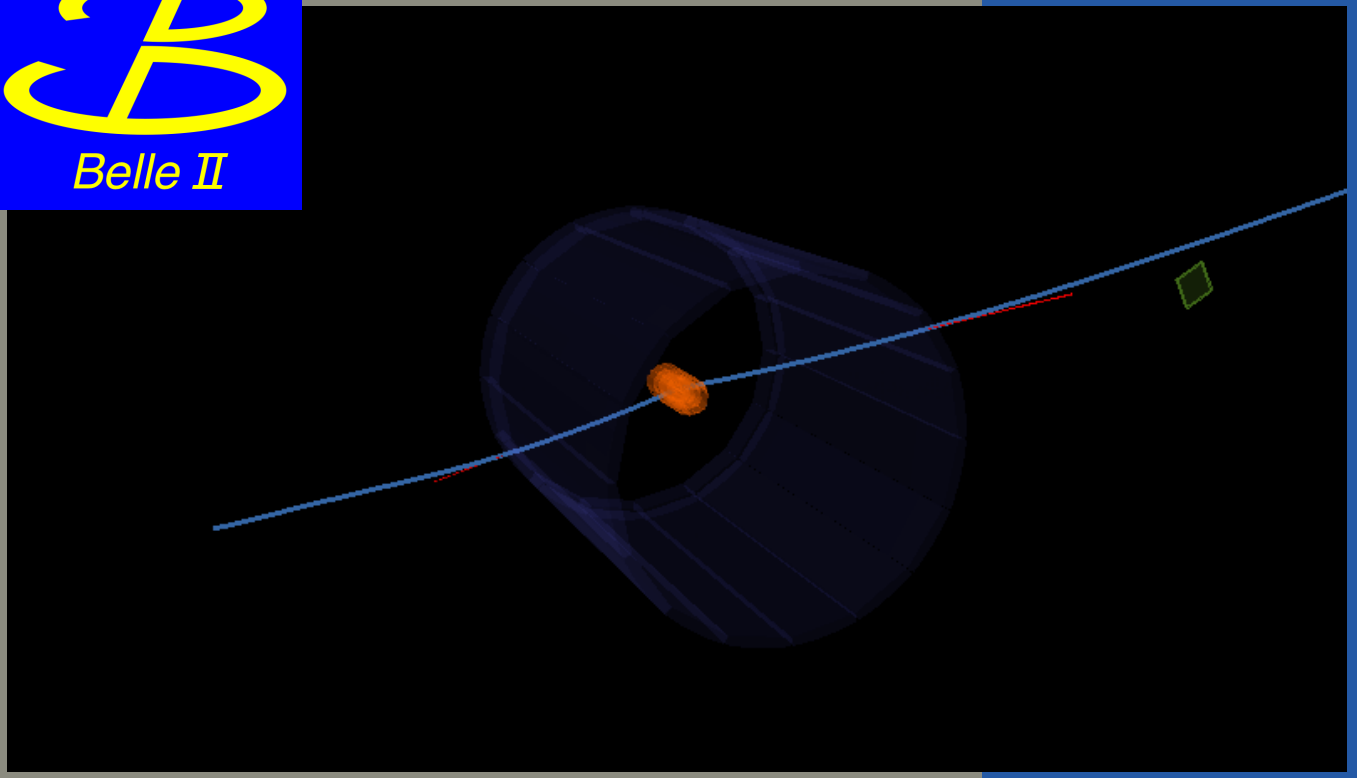

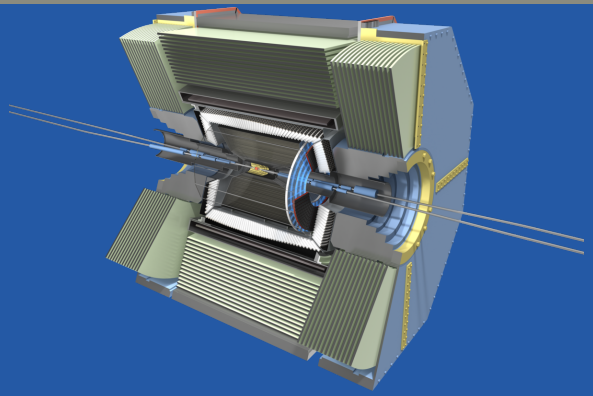

Ereignis 5

$\not{E} = -0.0$

$\nwarrow\!\!\searrow = 1.0$

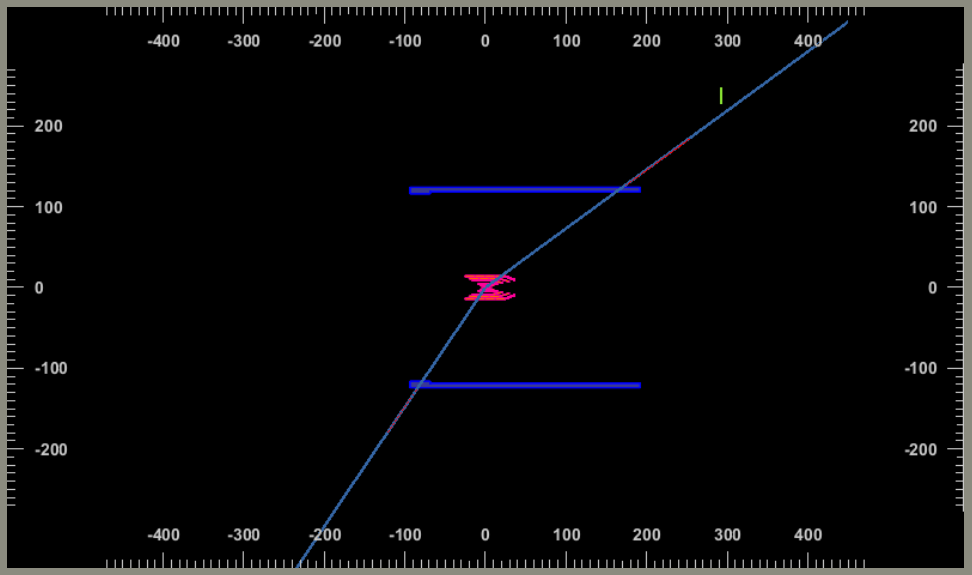

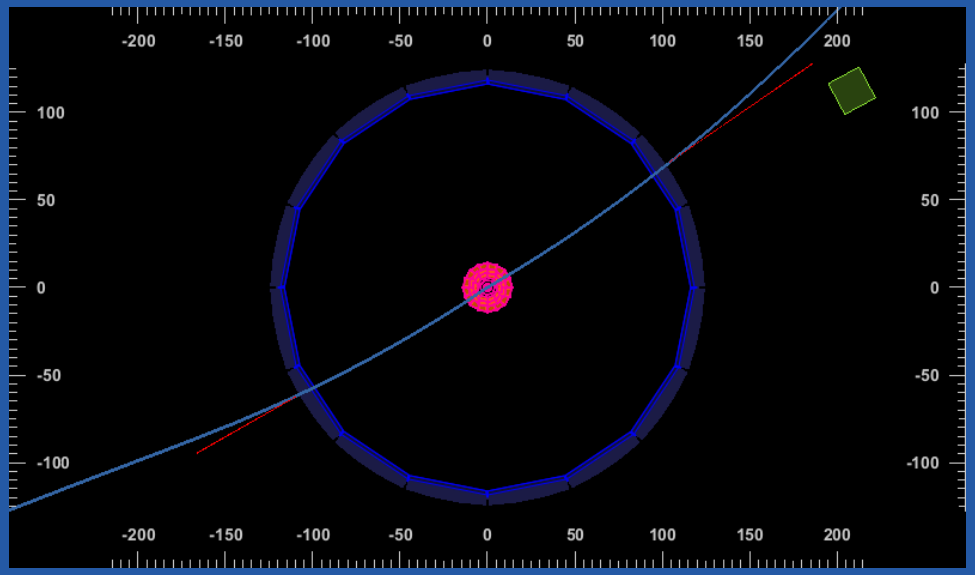

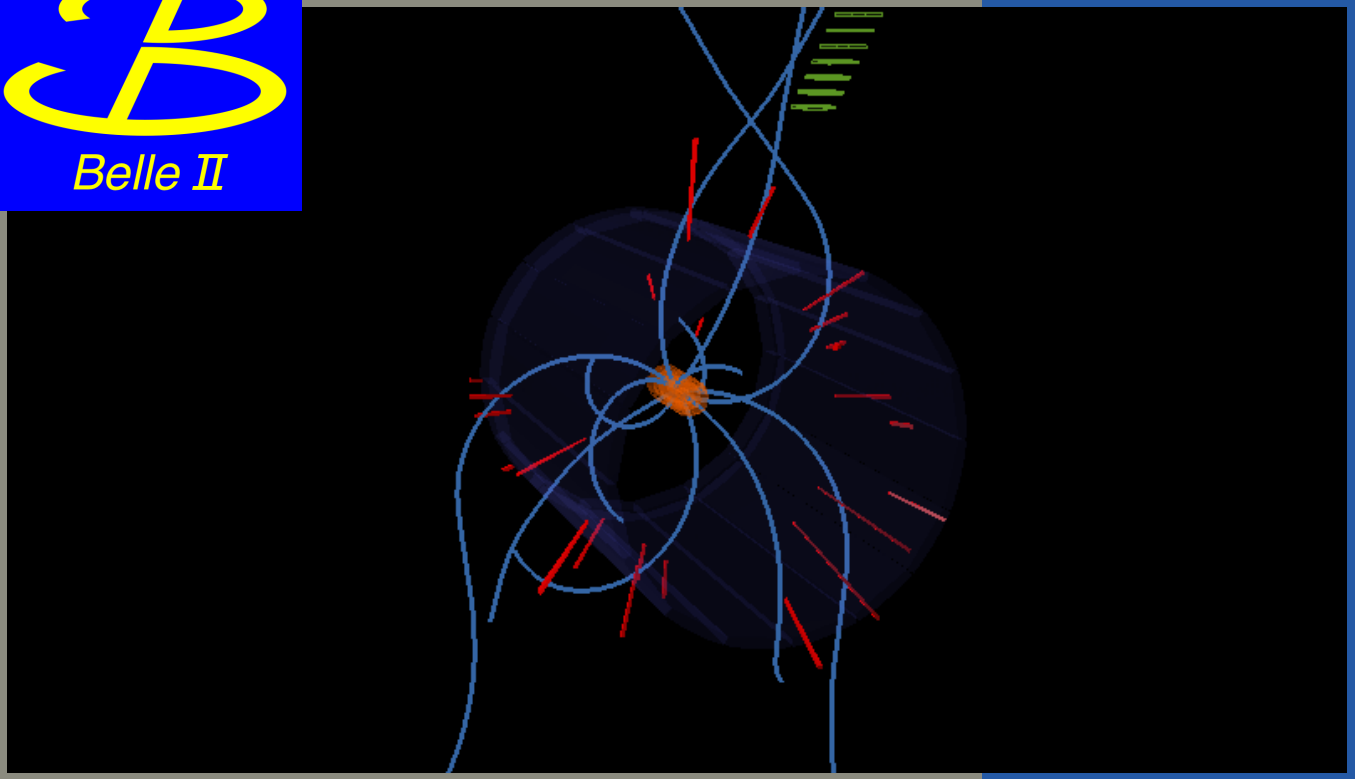

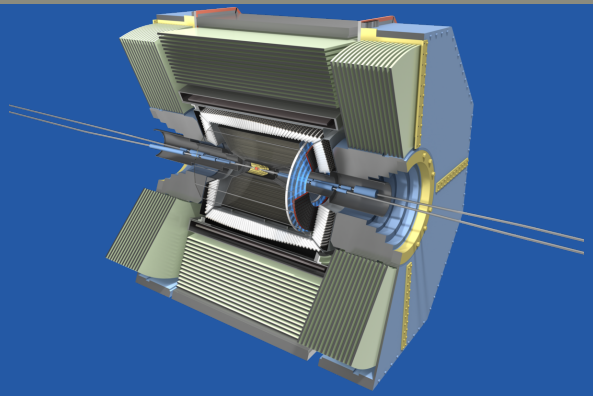

Ereignis 6

$\not{E} = -0.9$

$\nwarrow\!\!\searrow = 0.12$

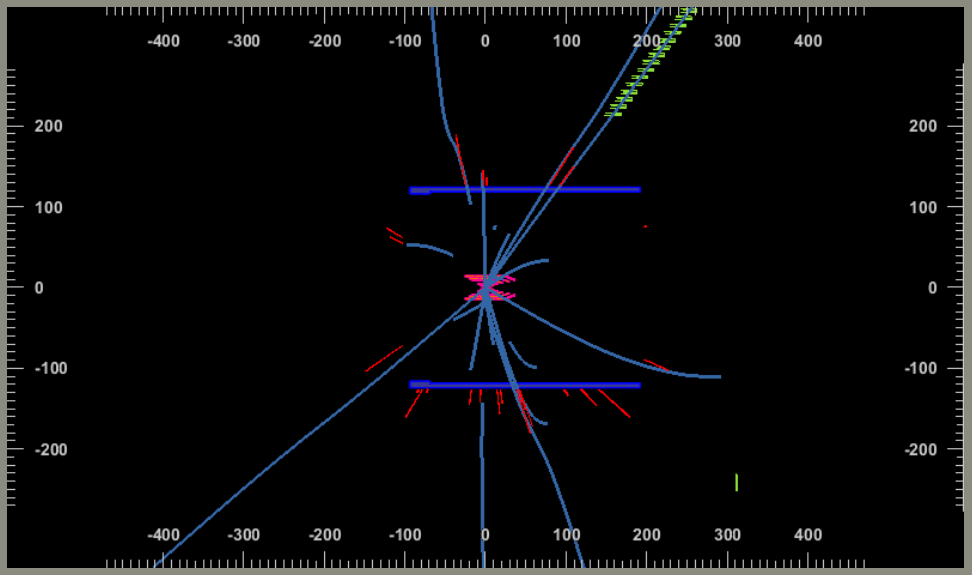

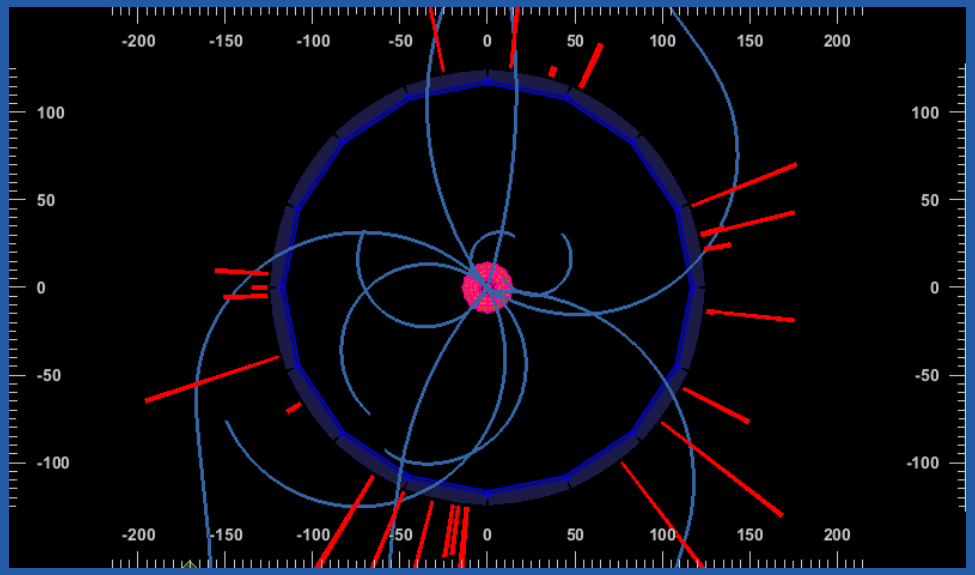

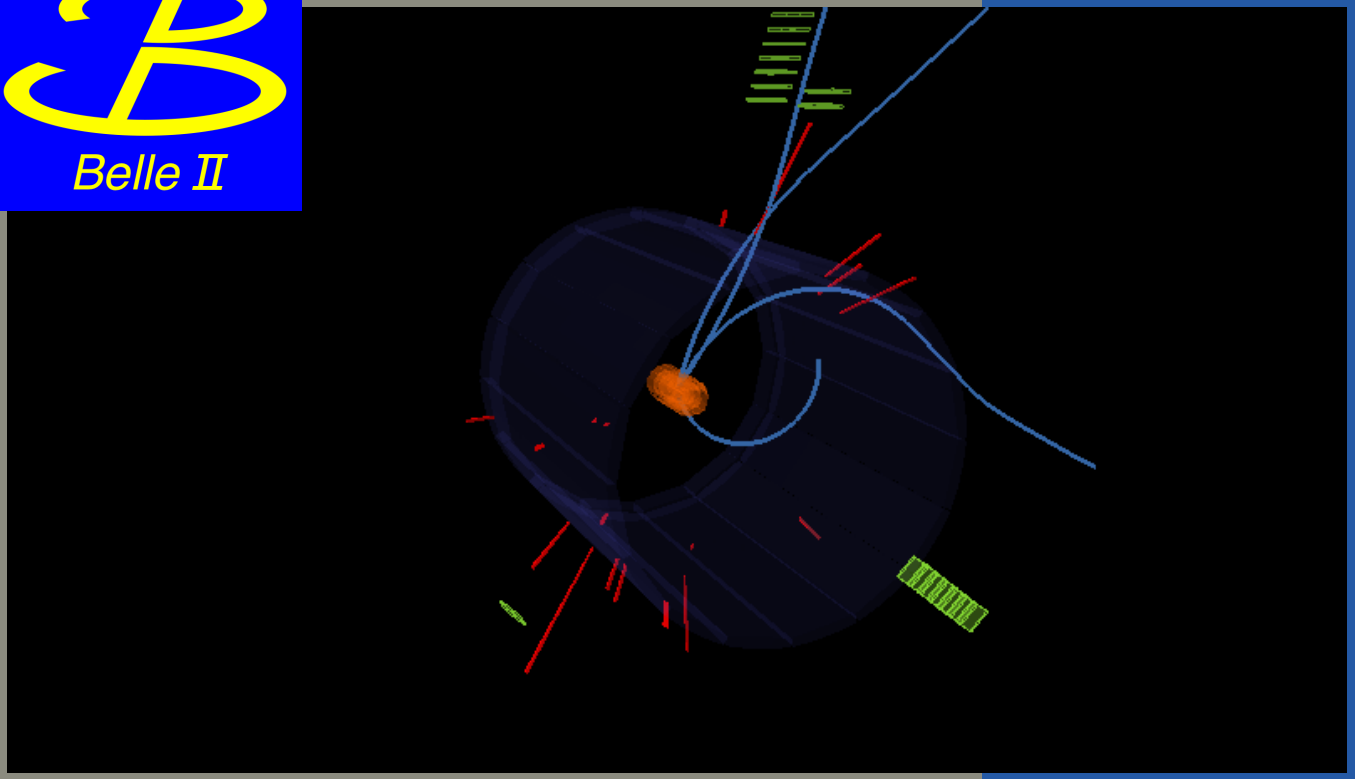

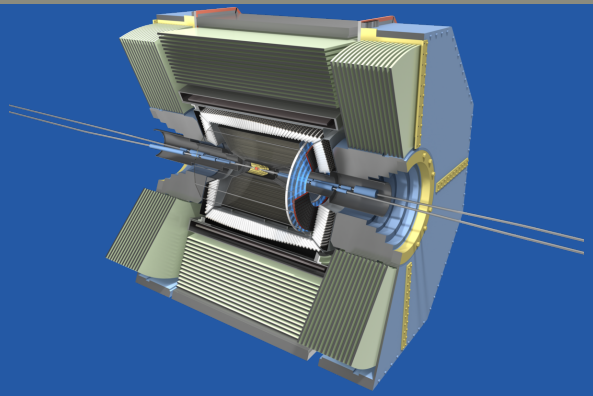

Ereignis 7

$\not{E} = 4.4$

$\nwarrow\!\!\searrow = 0.57$

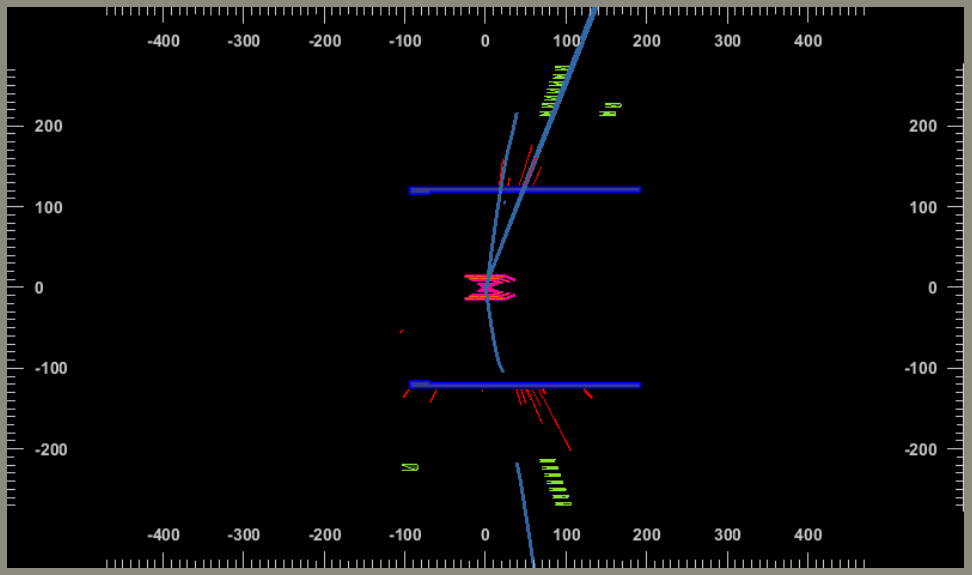

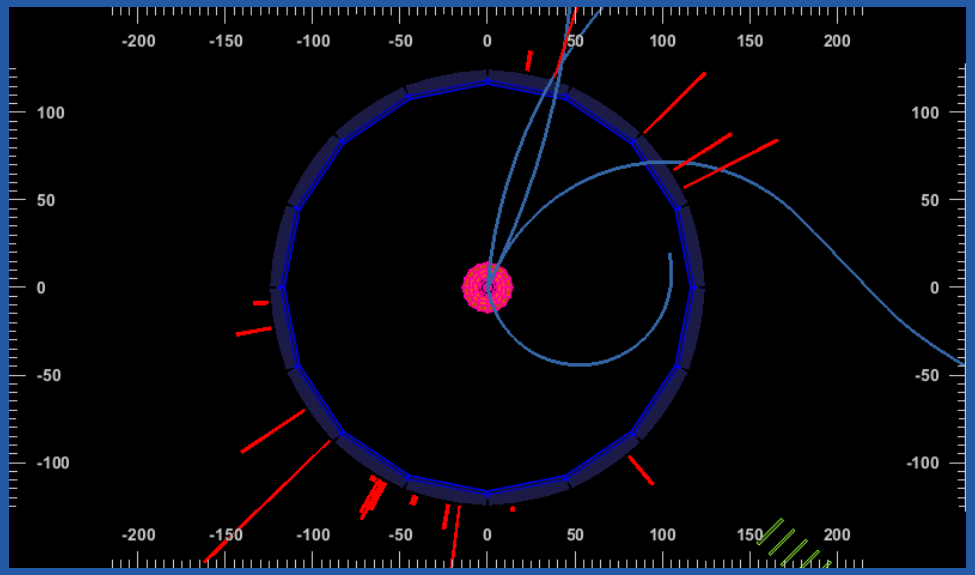

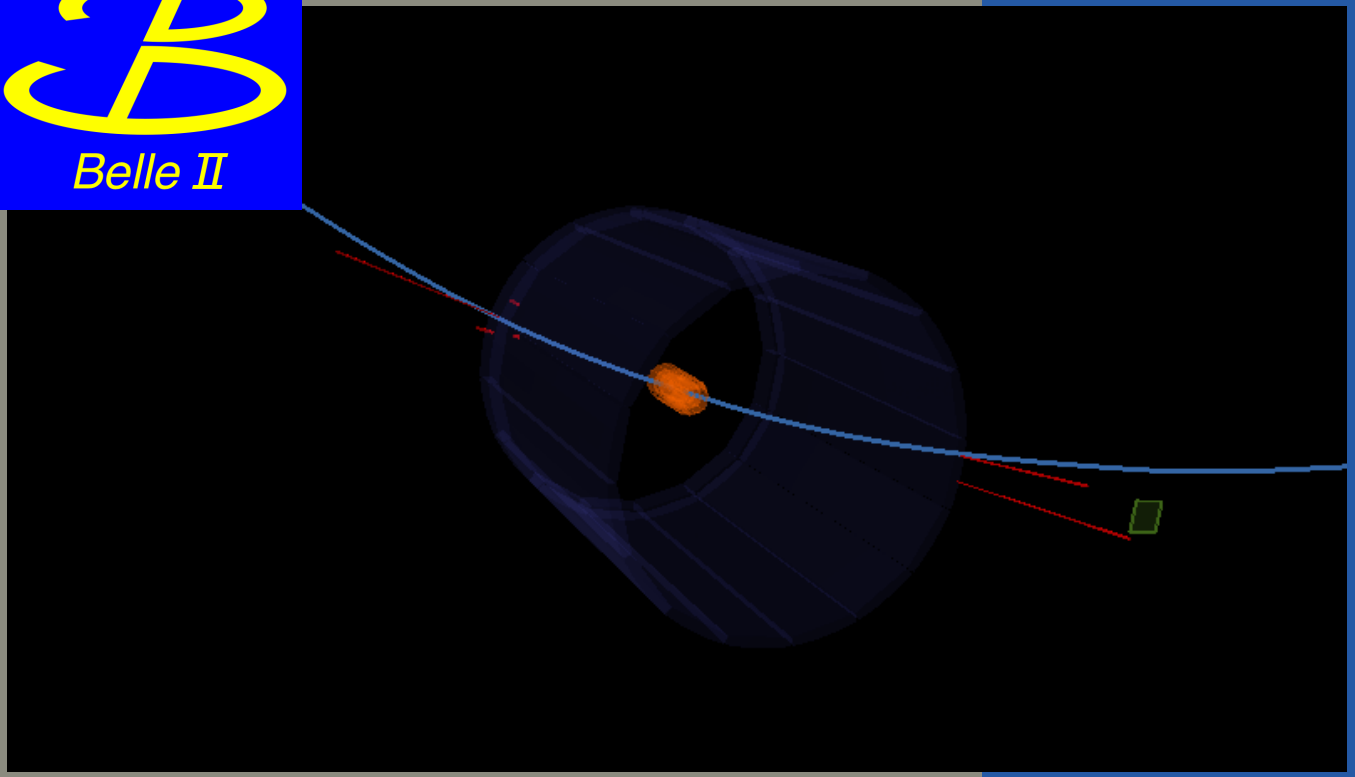

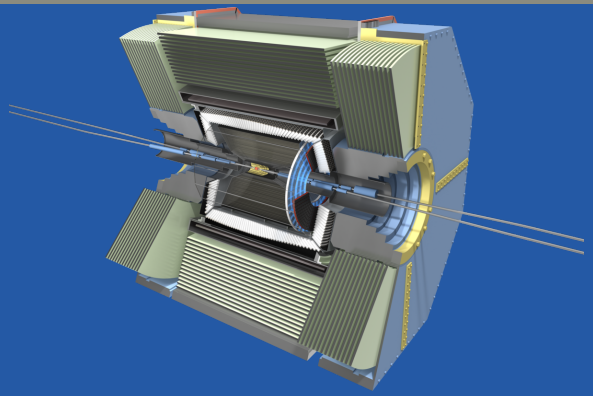

Ereignis 8

$\not{E} = 0.5$

$\nwarrow\!\!\searrow = 1.0$

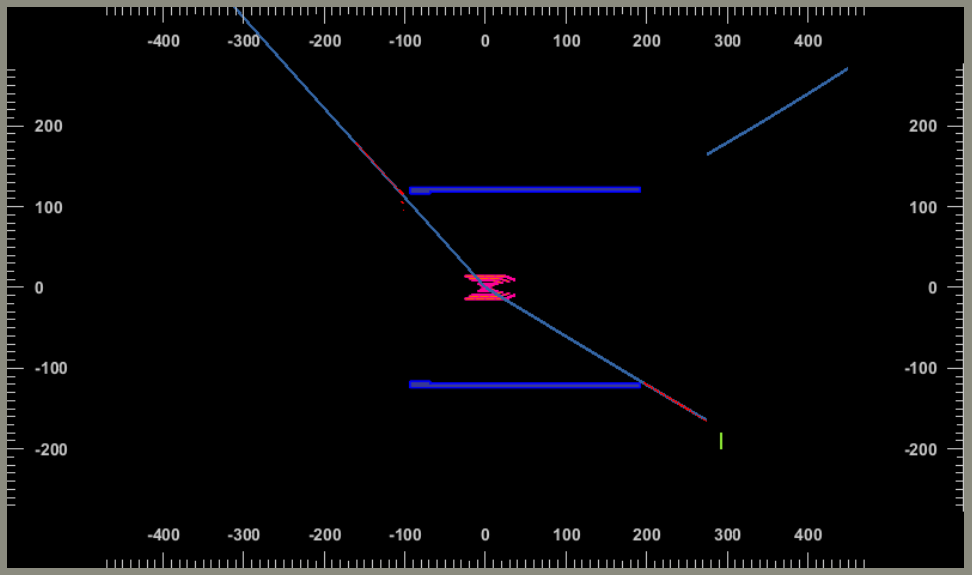

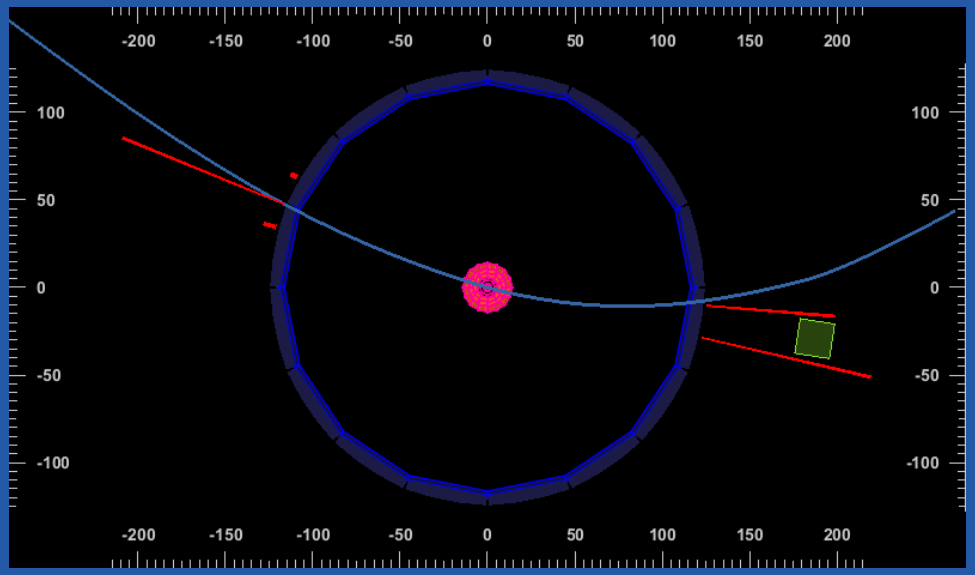

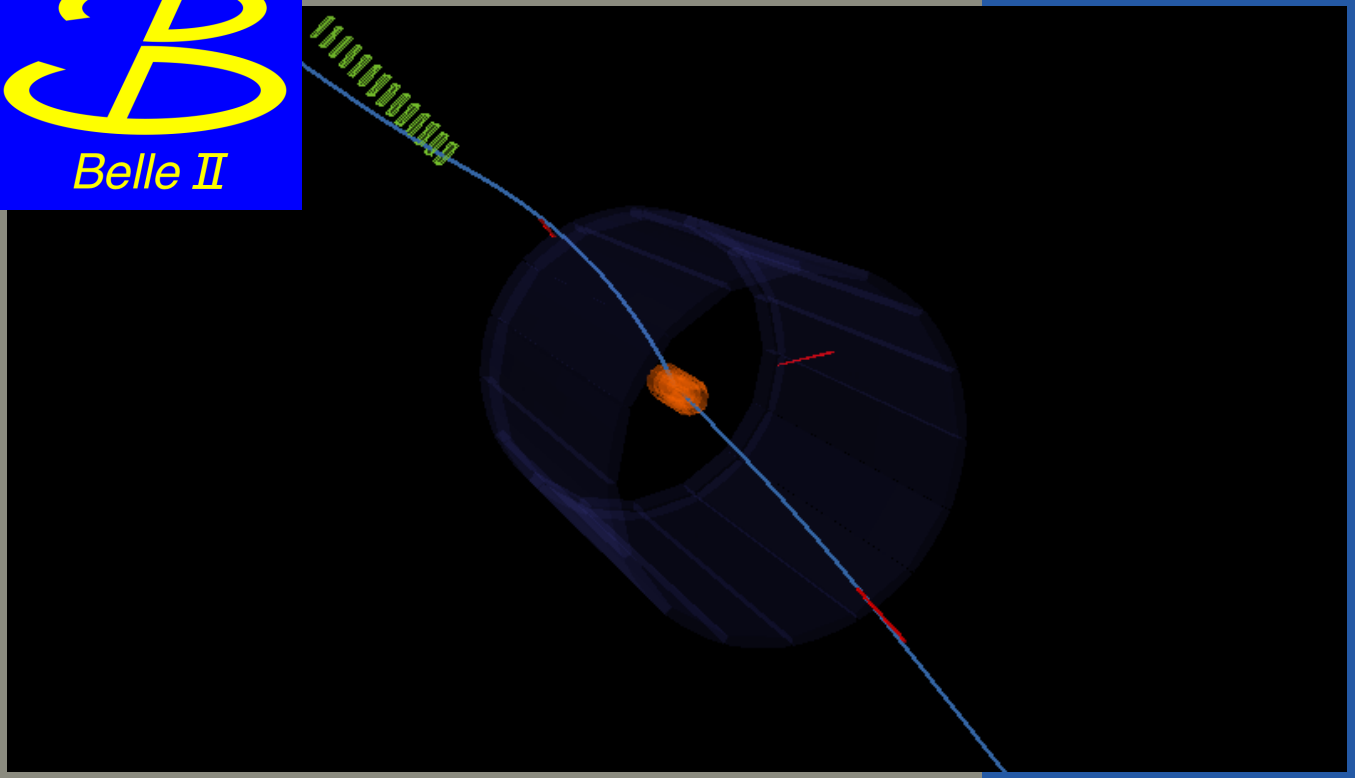

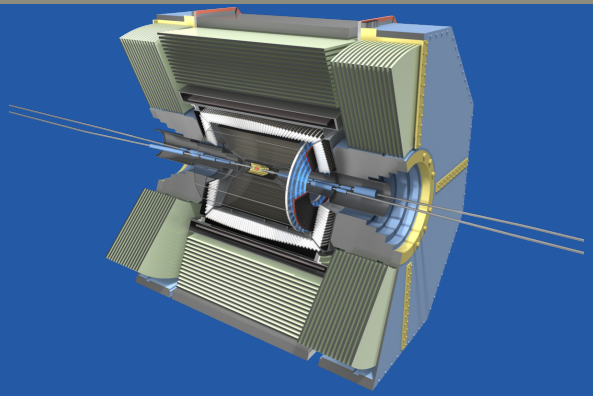

Ereignis 9

$\not{E} = 13.8$

$\nwarrow\!\!\searrow = 0.59$

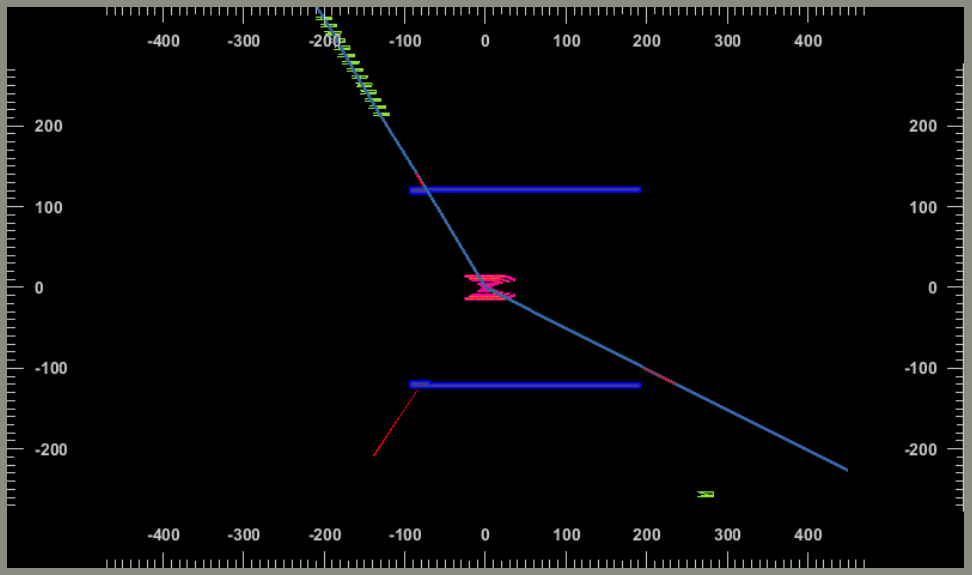

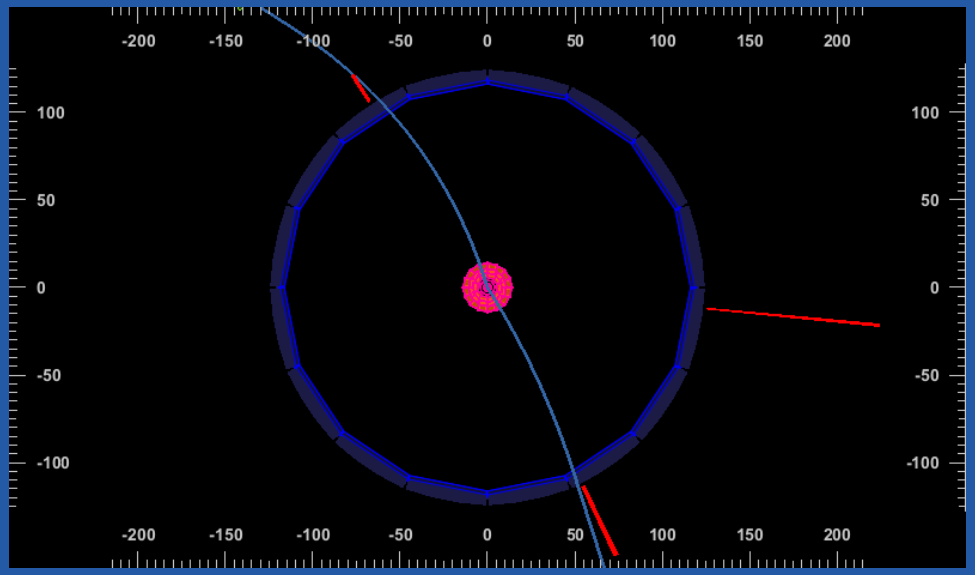

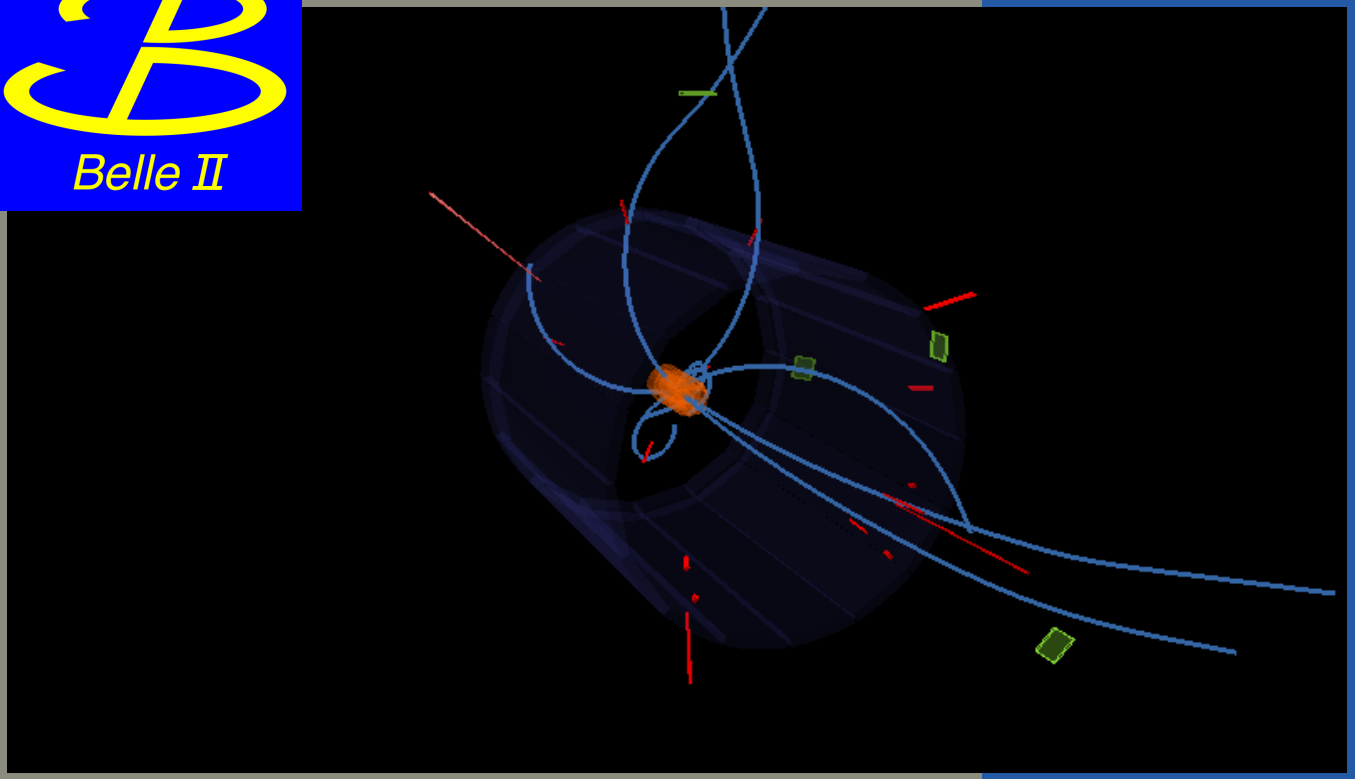

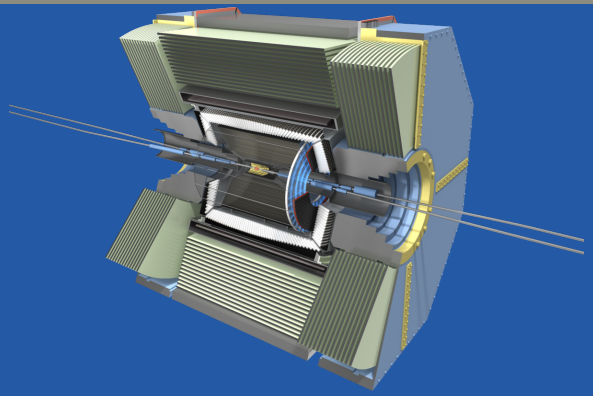

Ereignis 10

$\not{E} = 7.4$

$\nwarrow\!\!\searrow = 0.18$

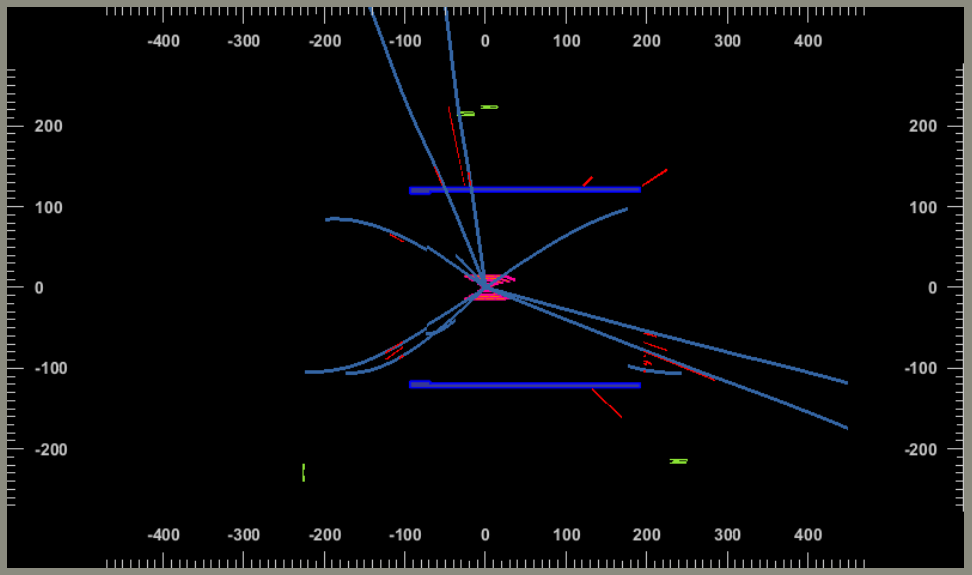

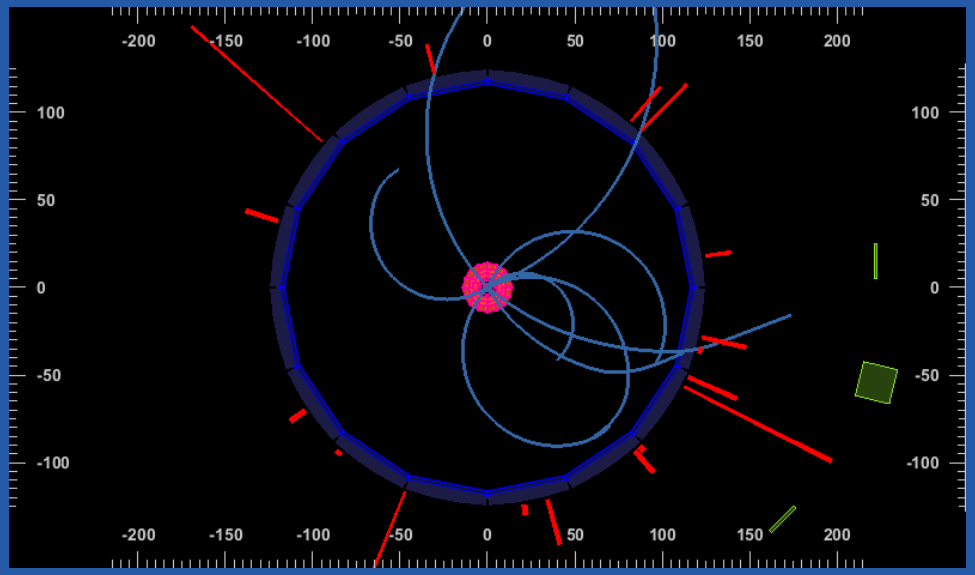

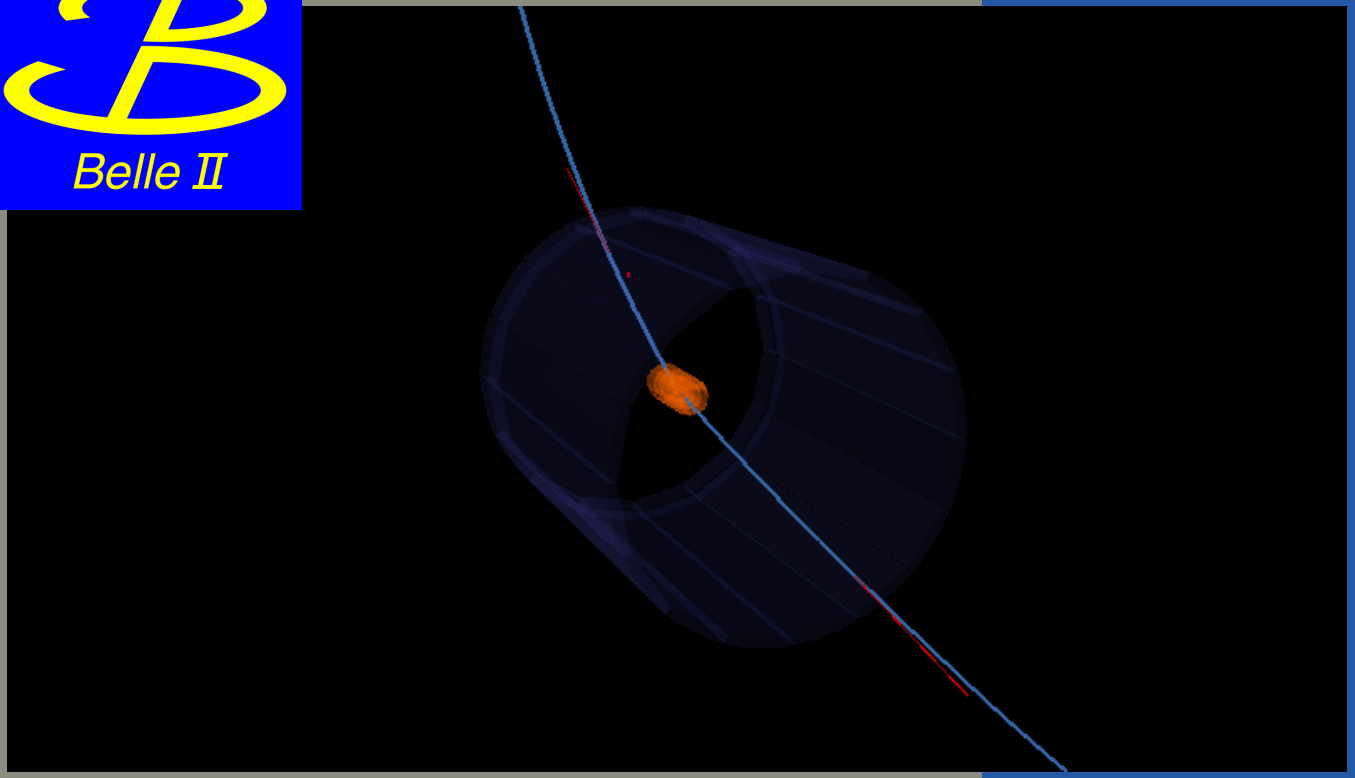

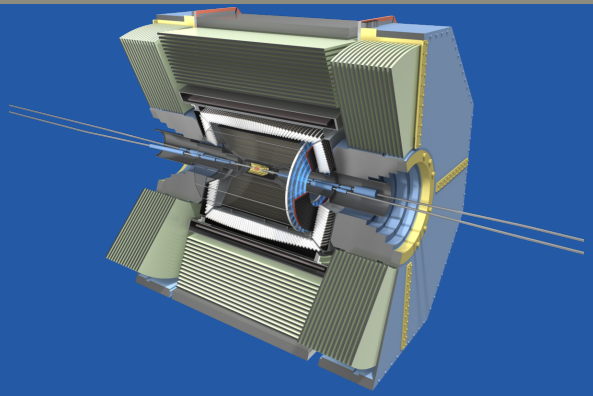

Ereignis 11

$\not{E} = 0.0$

$\nwarrow\!\!\searrow = 1.0$

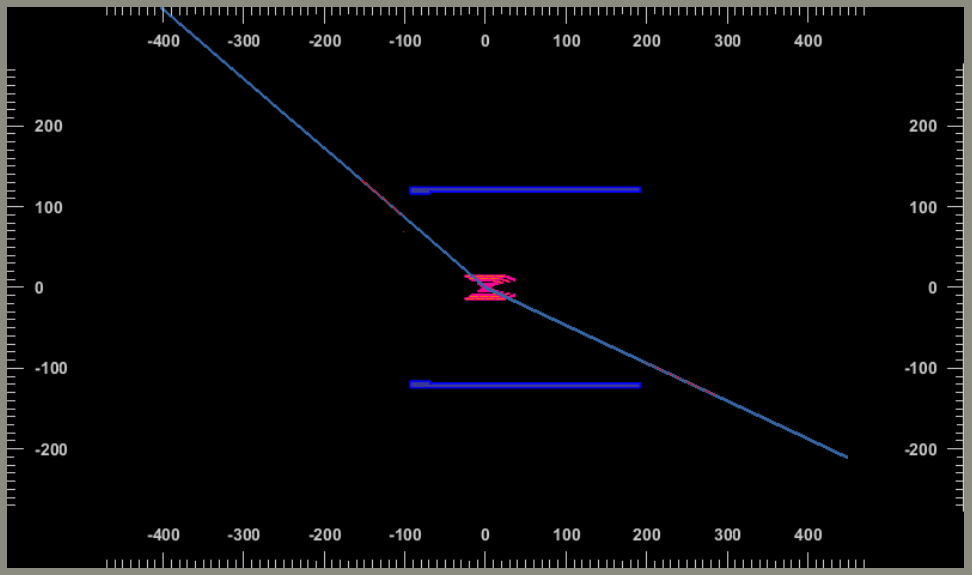

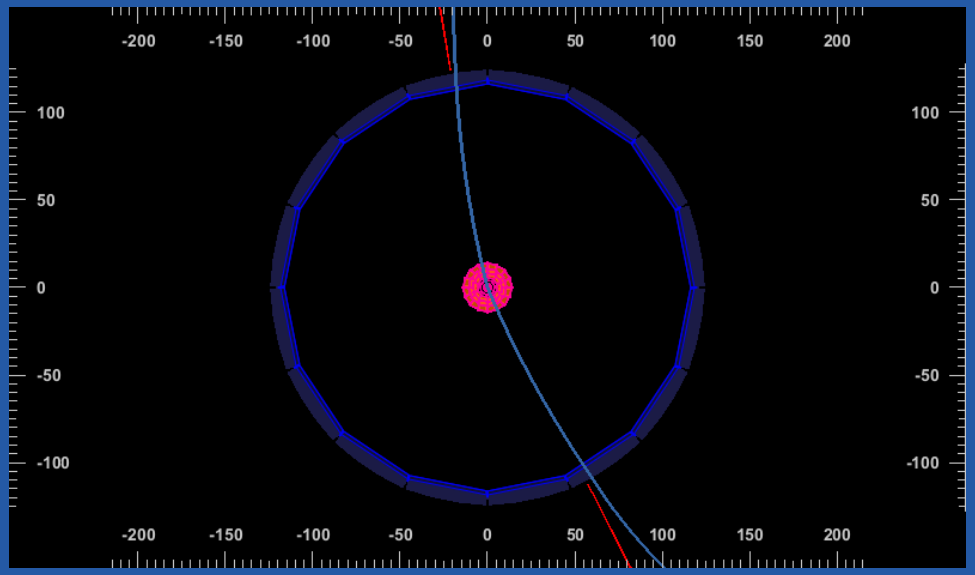

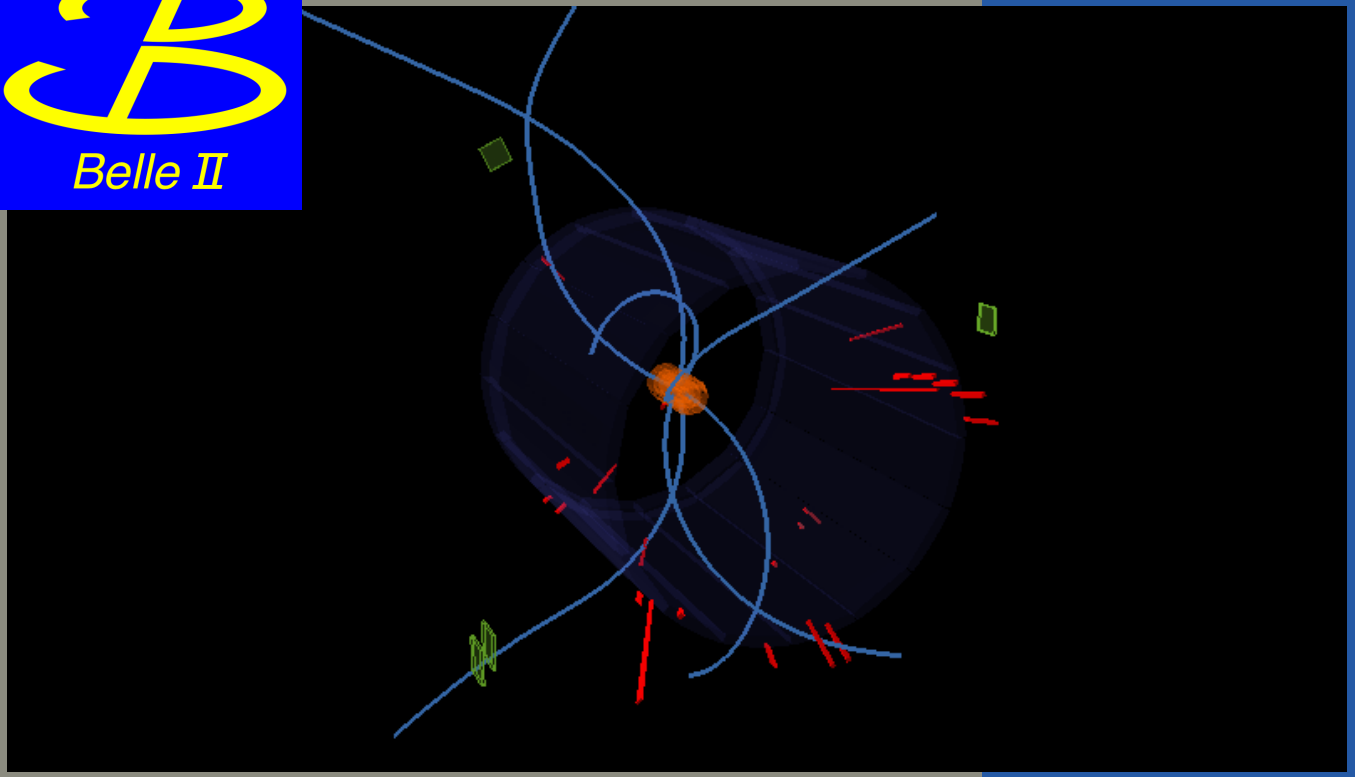

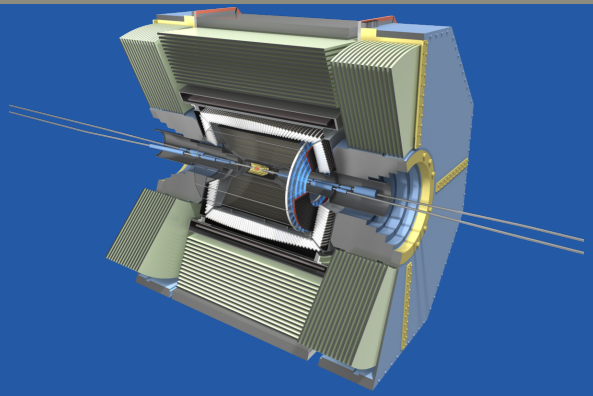

Ereignis 12

$\not{E} = 17.0$

$\nwarrow\!\!\searrow = 0.07$

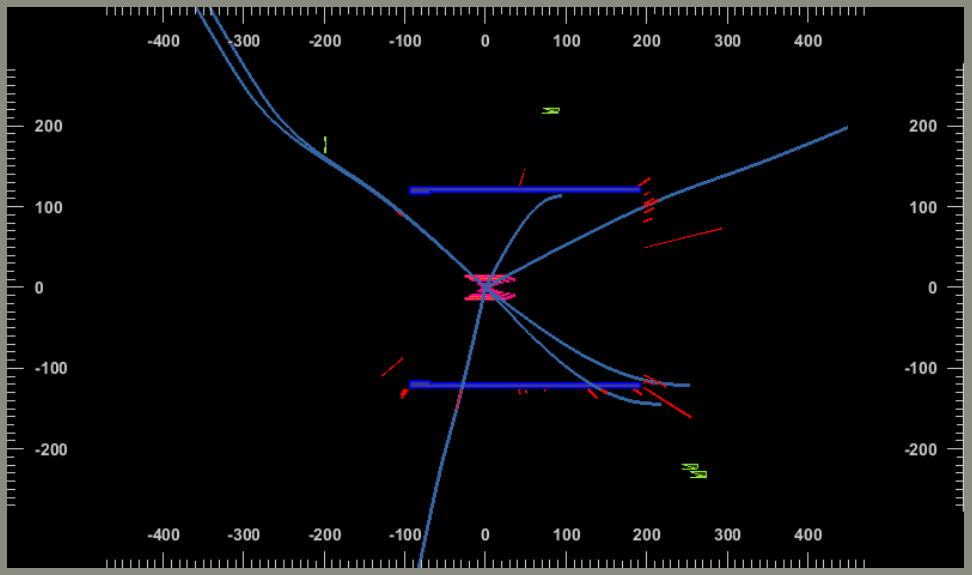

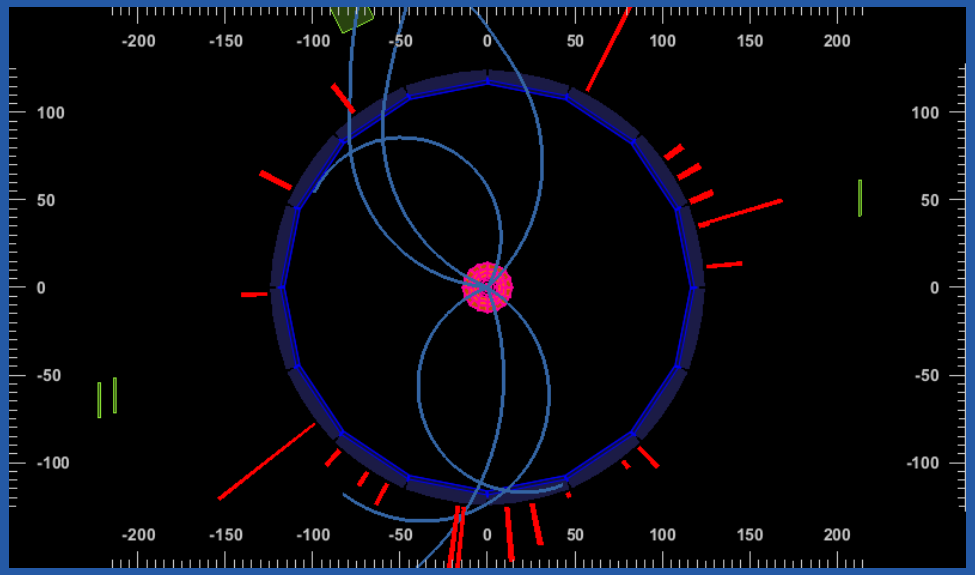

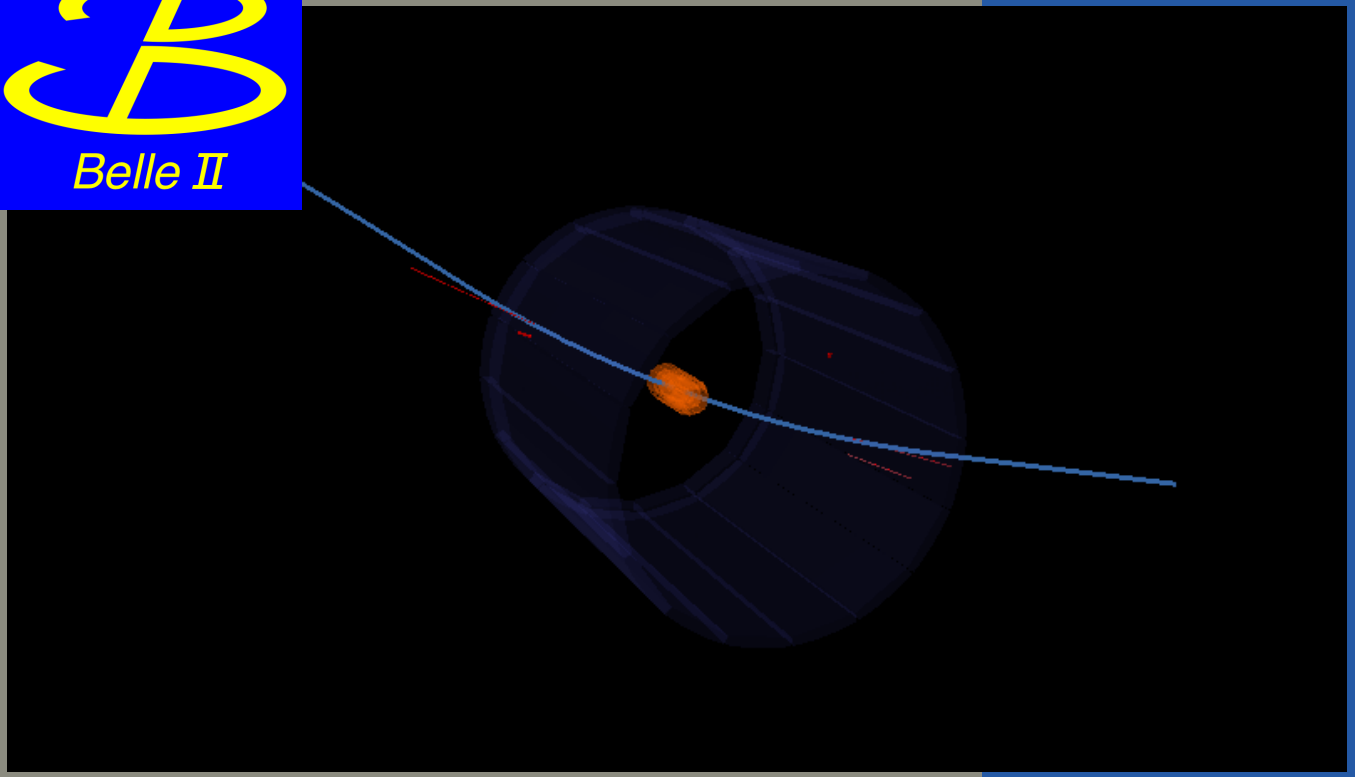

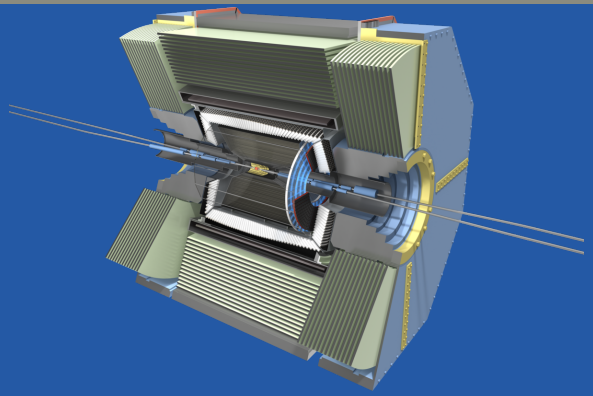

Ereignis 13

$\not{E} = 0.2$

$\nwarrow\!\!\searrow = 1.0$

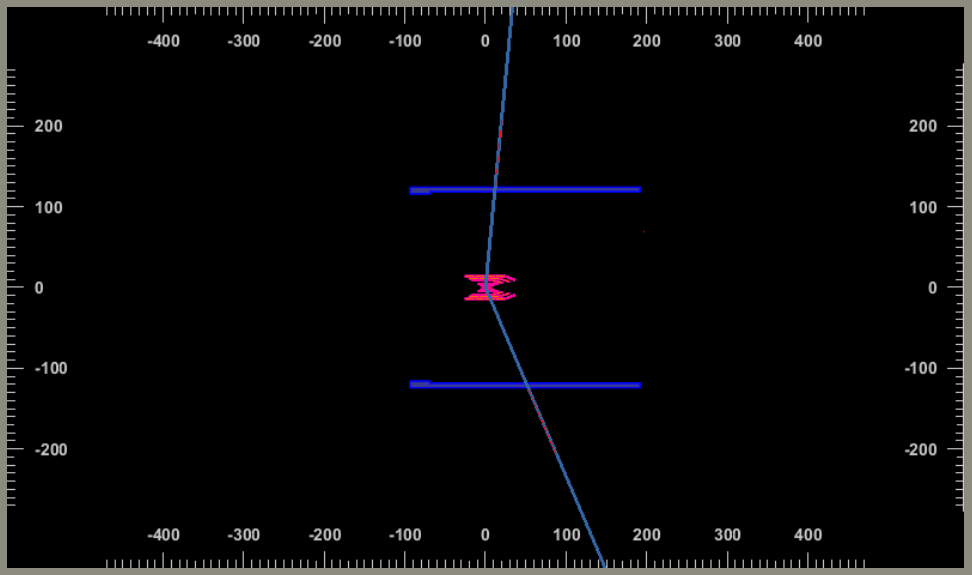

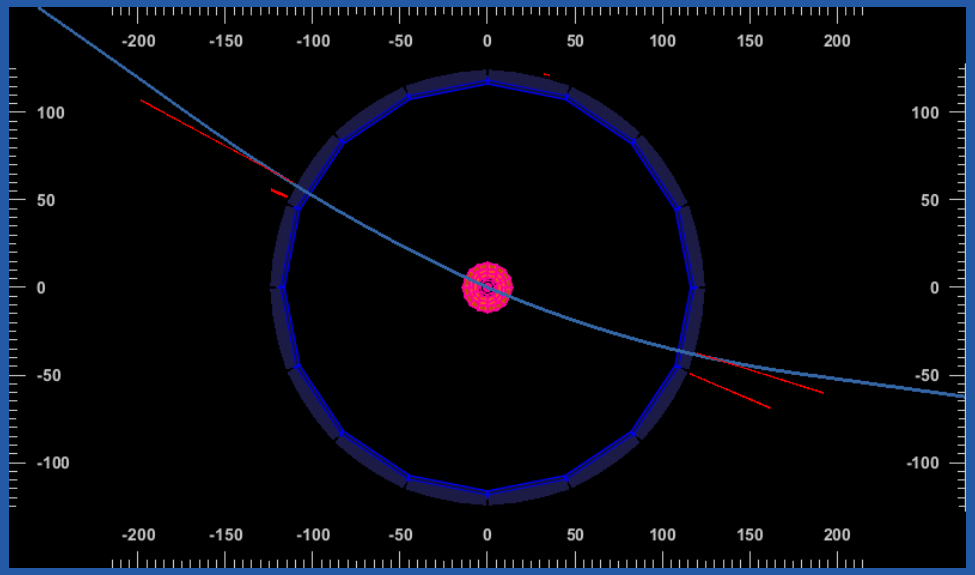

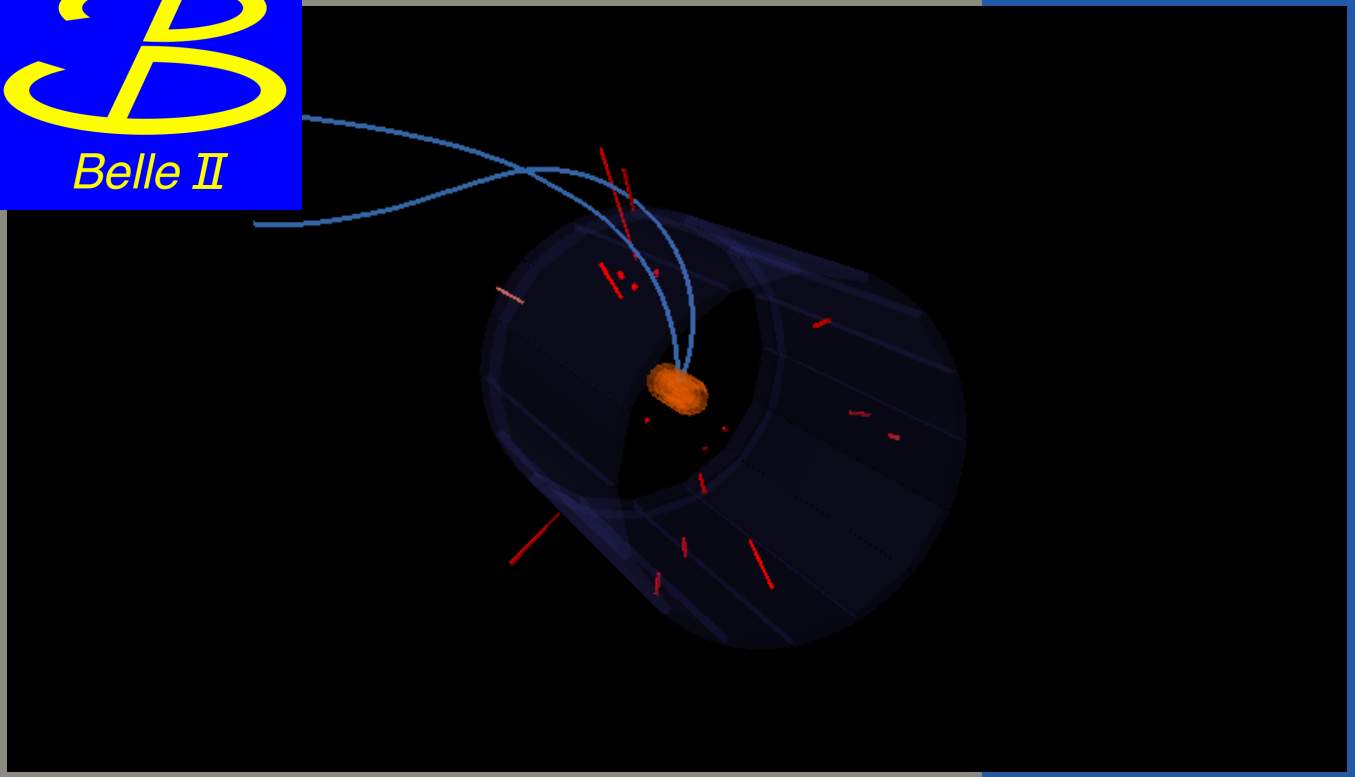

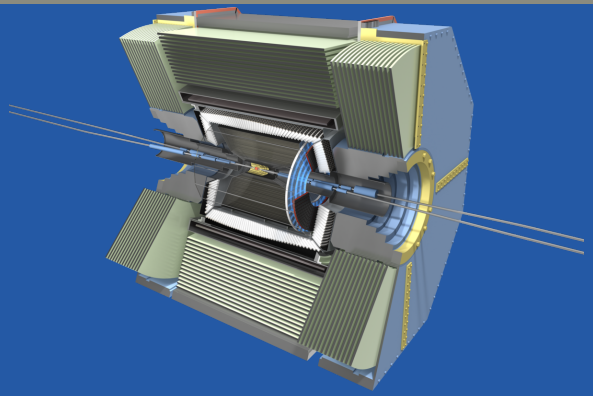

Ereignis 14

$\not{E} = 56.1$

$\nwarrow\!\!\searrow = 0.1$

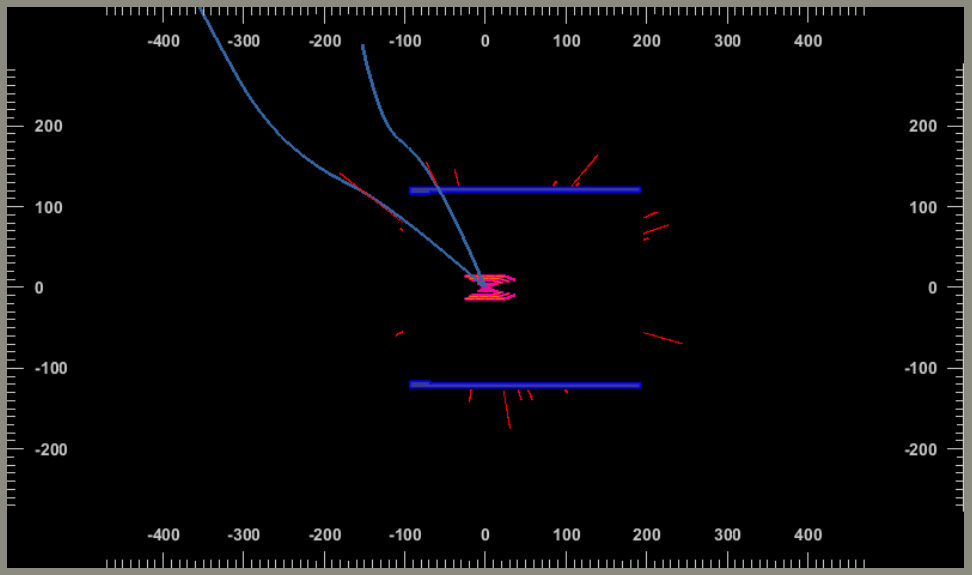

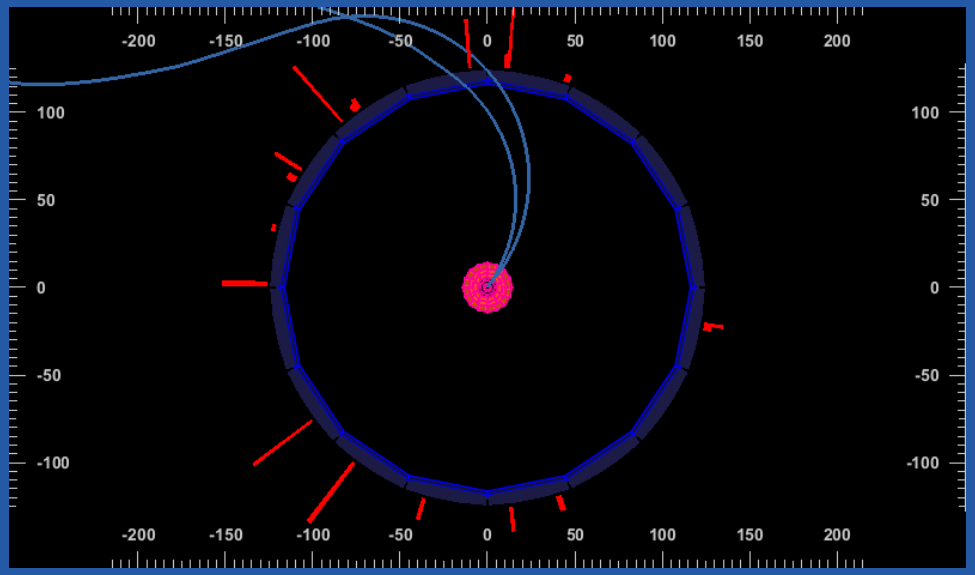

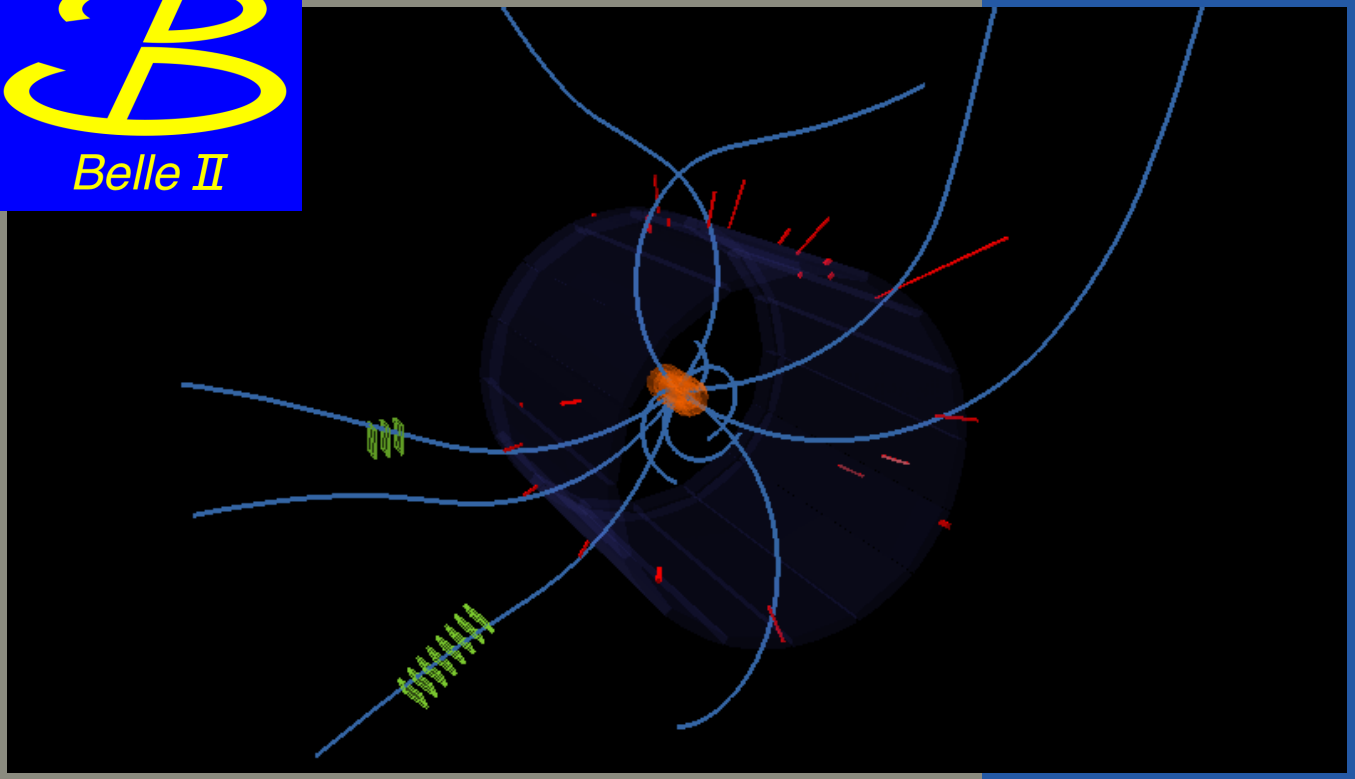

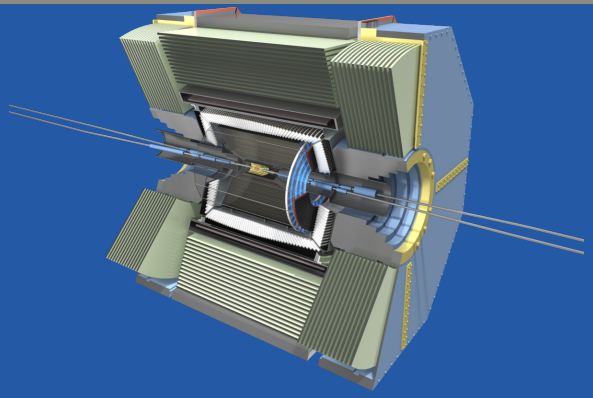

Ereignis 15

$\not{E} = 3.1$

$\nwarrow\!\!\!\searrow = 0.19$

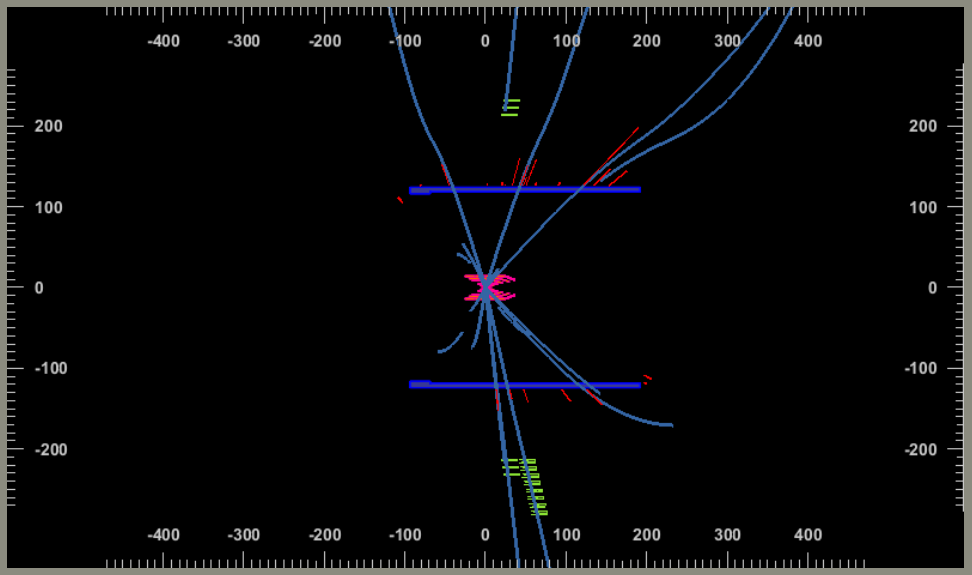

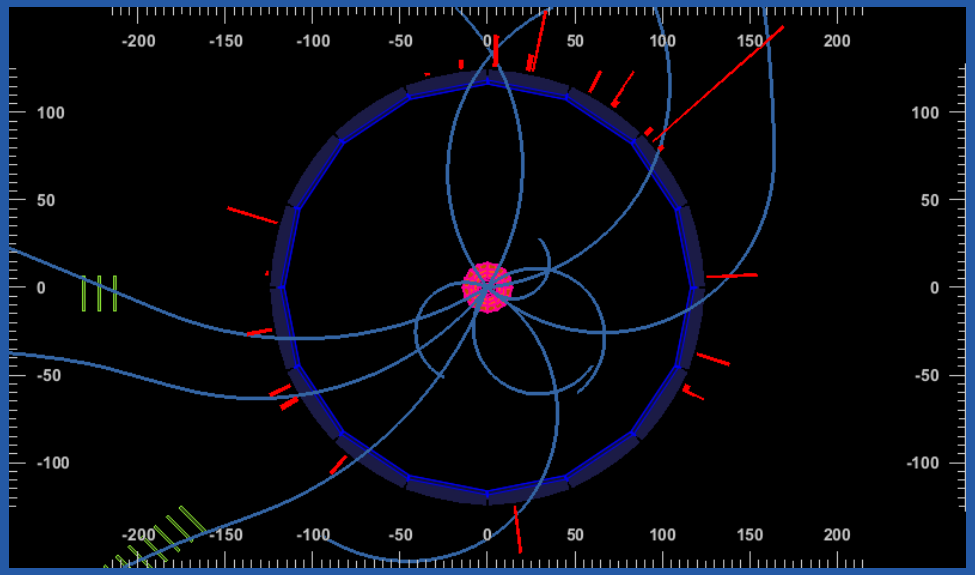

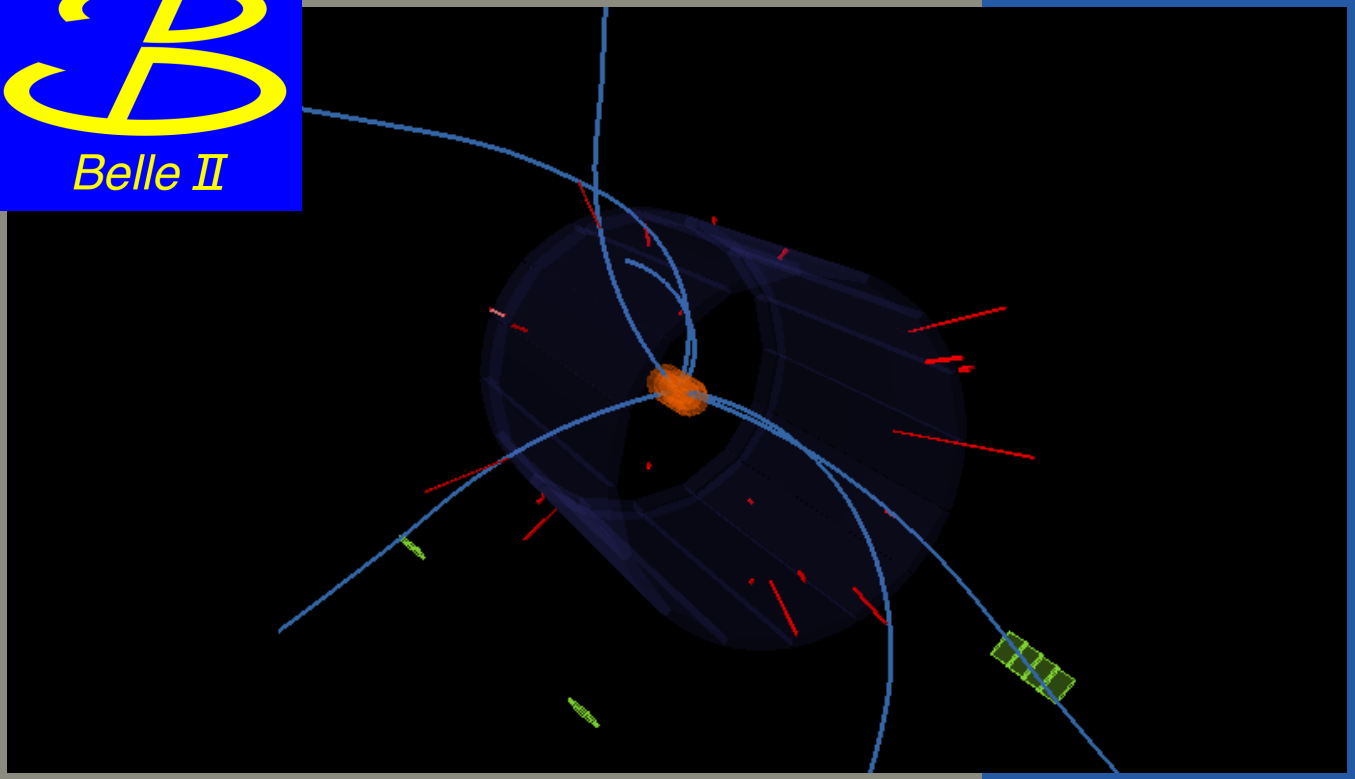

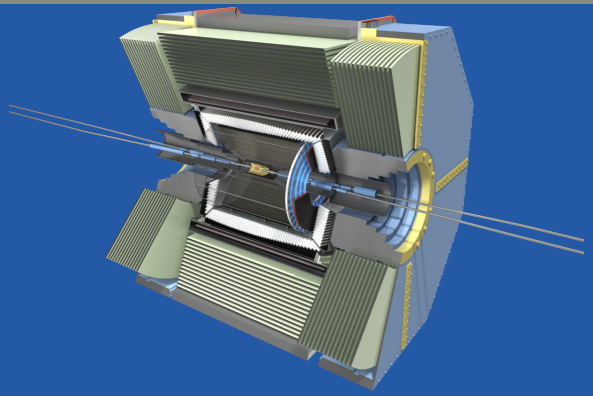

Ereignis 16

$\not{E} = 0.0$

$\nwarrow\!\!\searrow = 0.29$

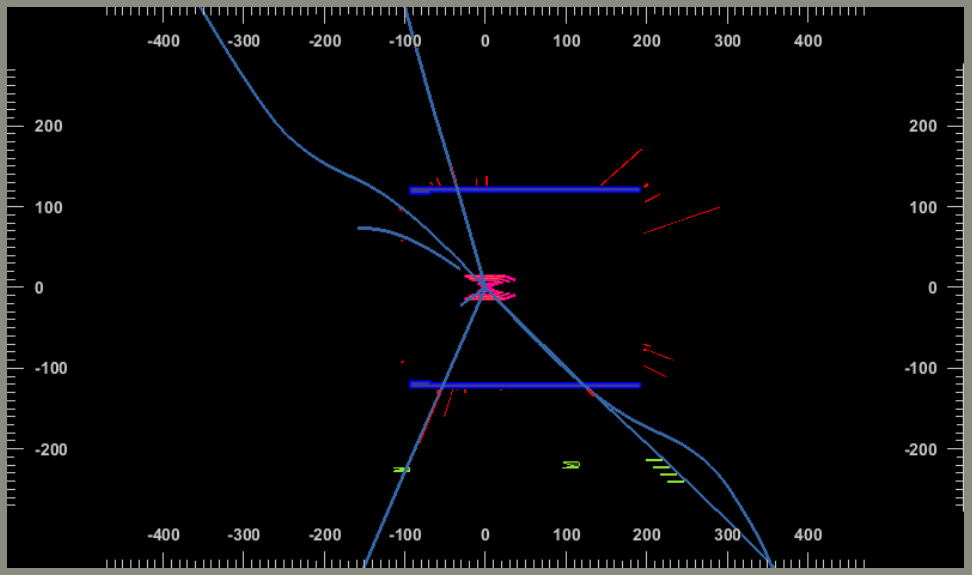

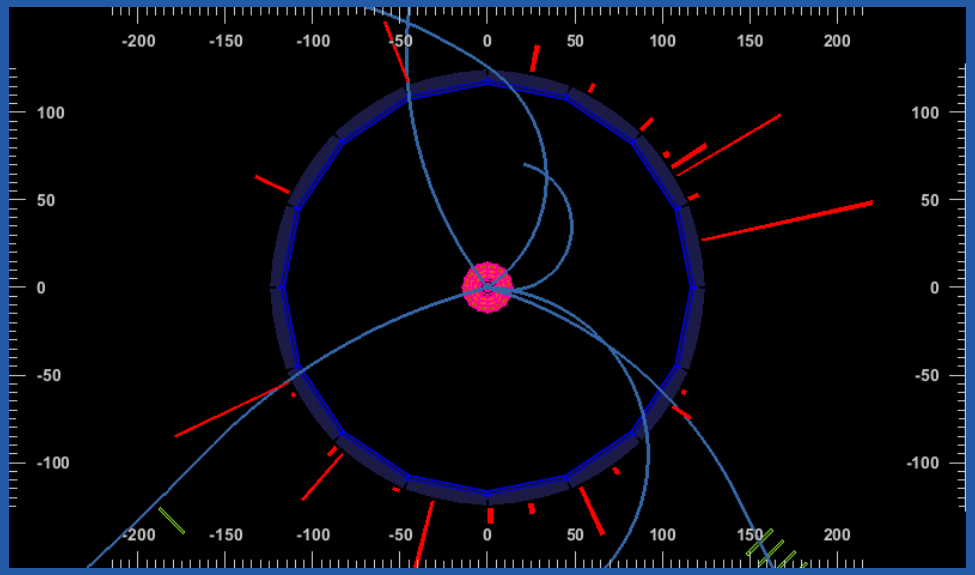

Belle II

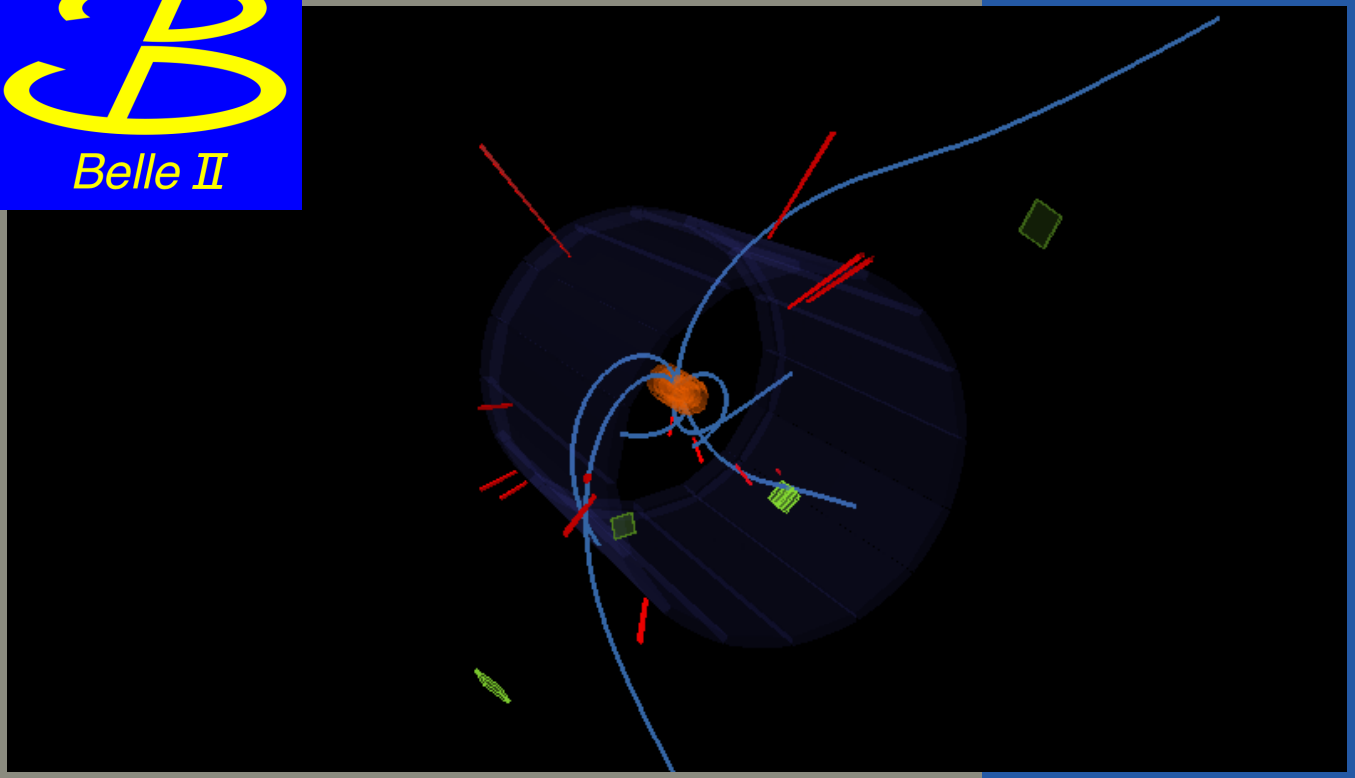

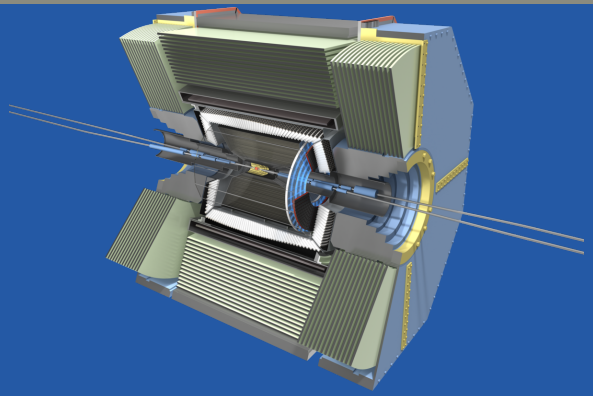

Ereignis 17

$\not{E} = 22.9$

$\nwarrow\!\!\searrow = 0.41$

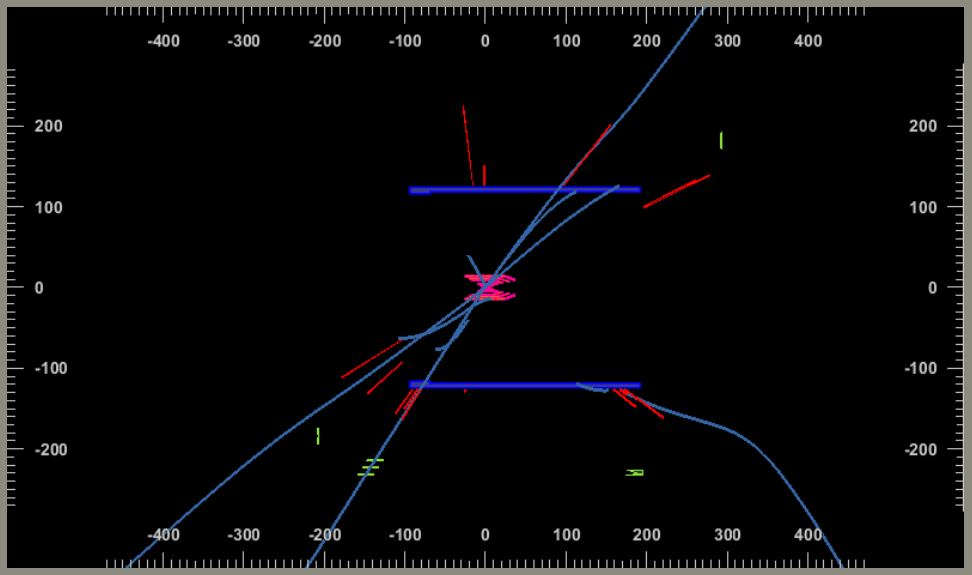

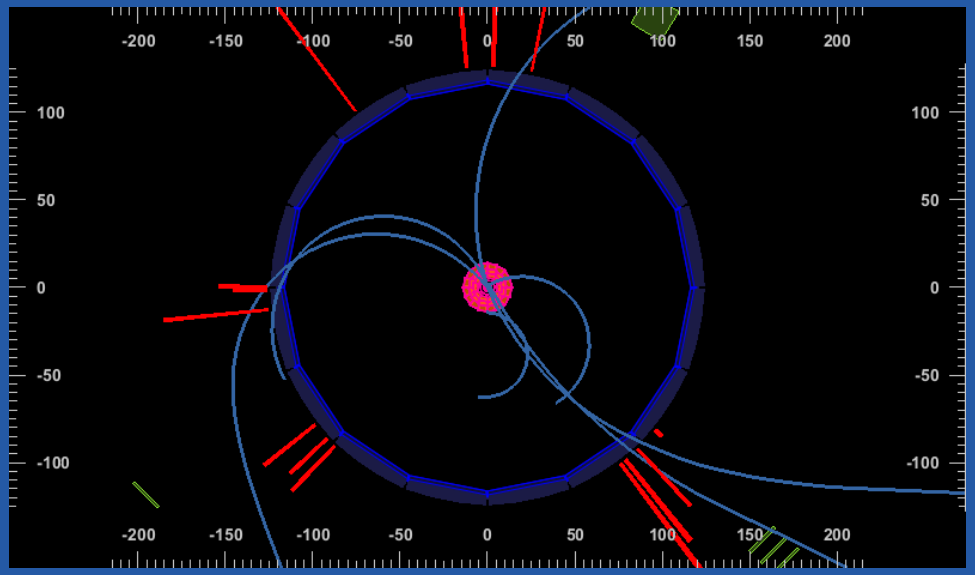

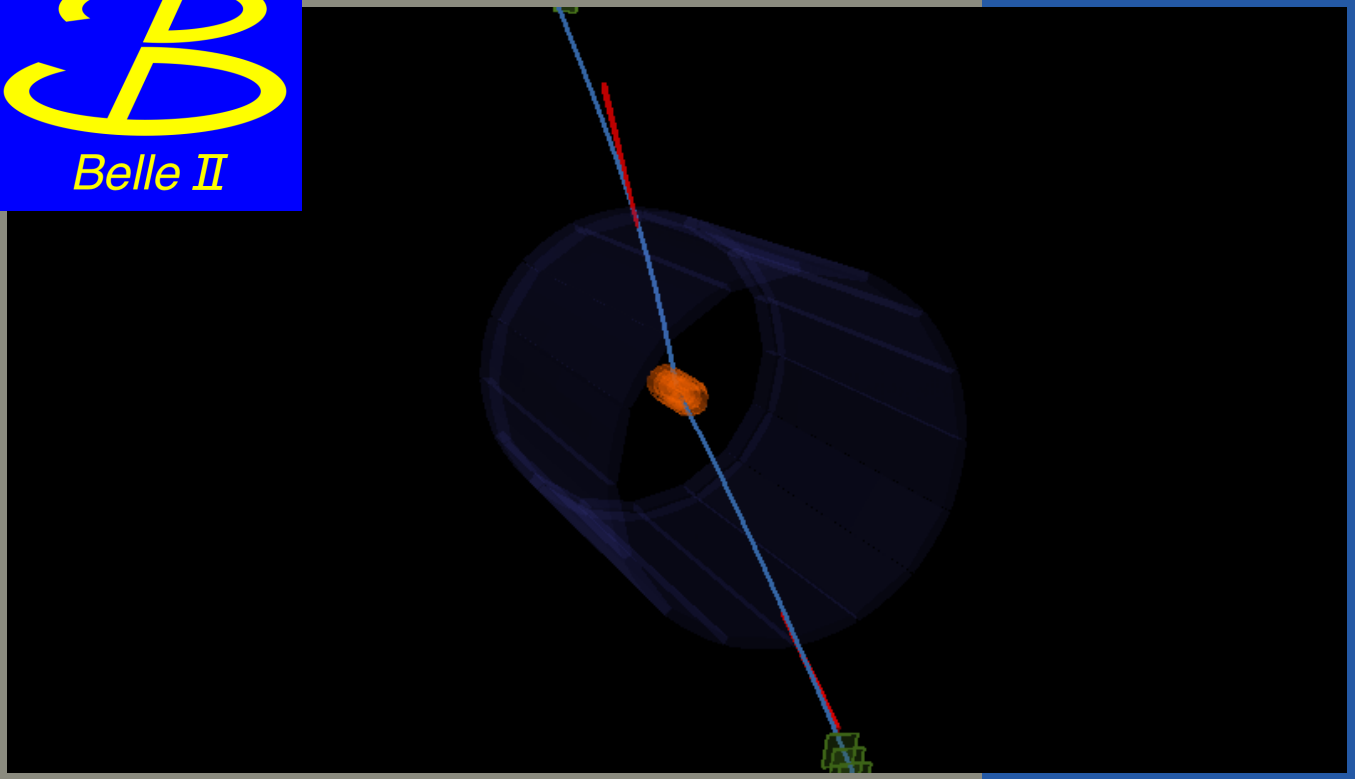

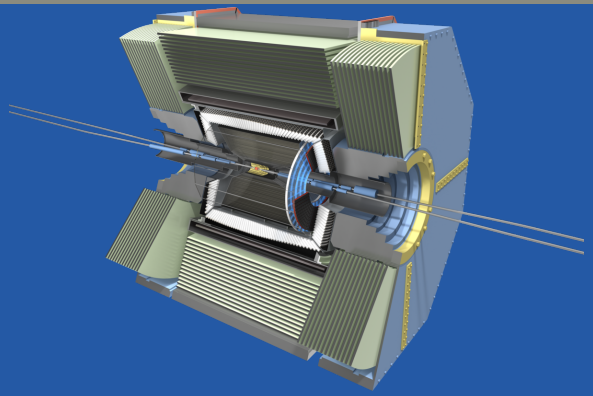

Ereignis 18

$\not{E} = 0.0$

$\nwarrow\!\!\searrow = 1.0$

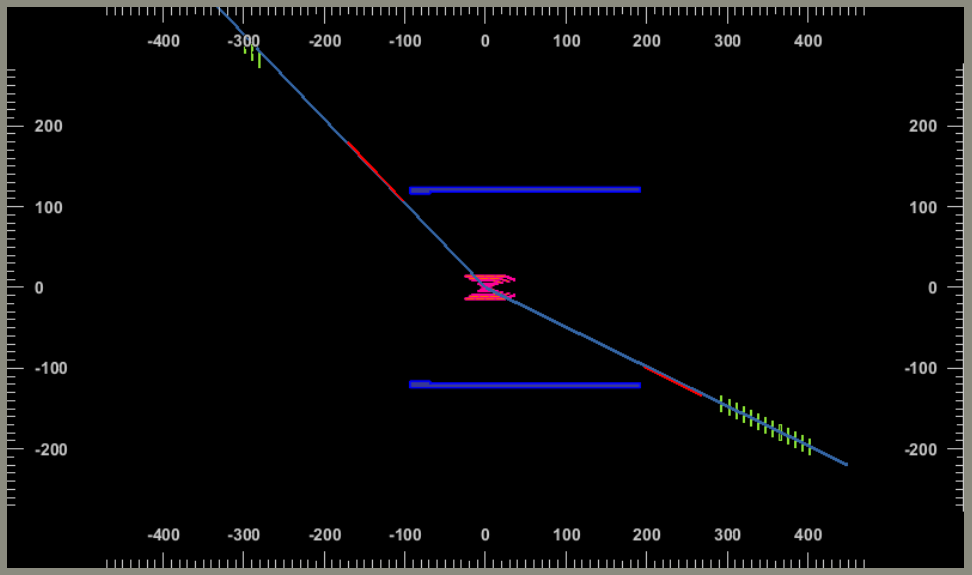

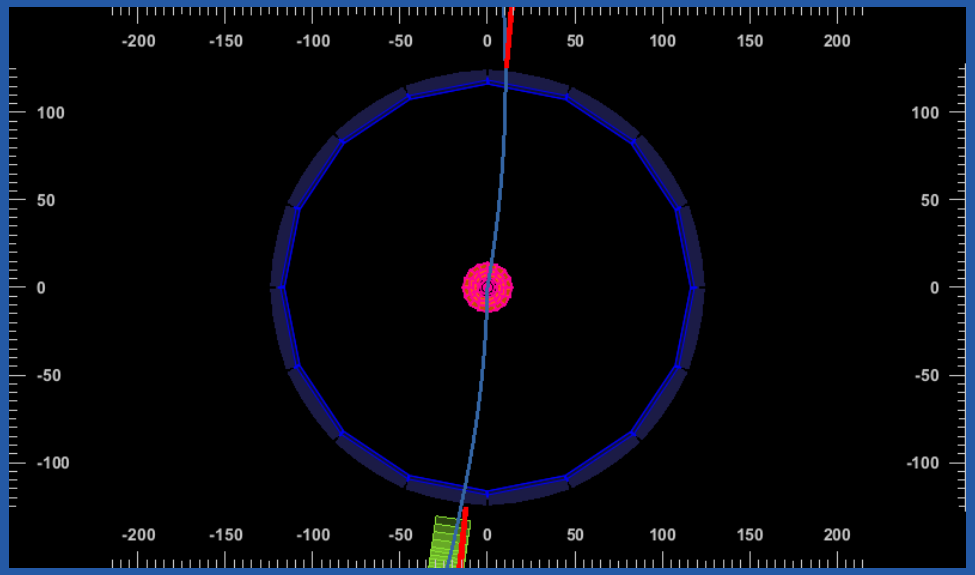

Belle II

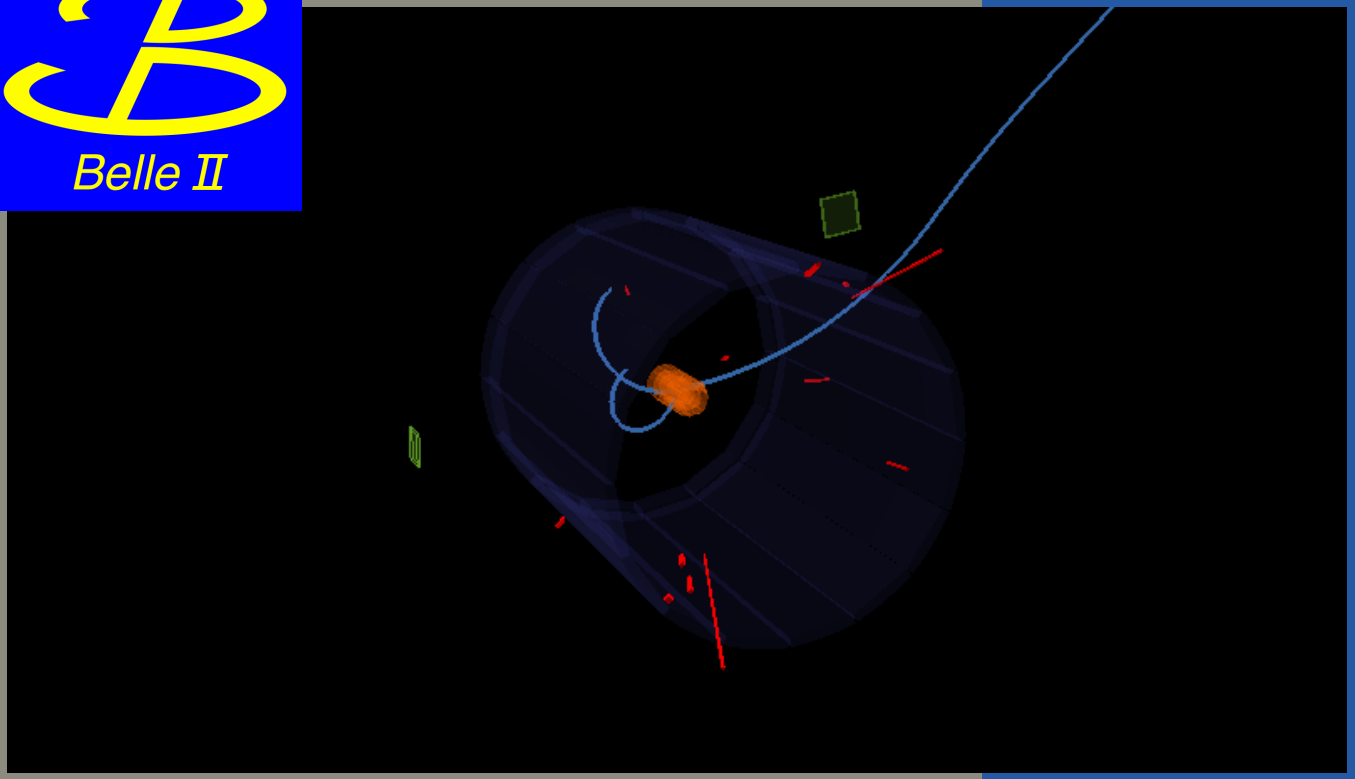

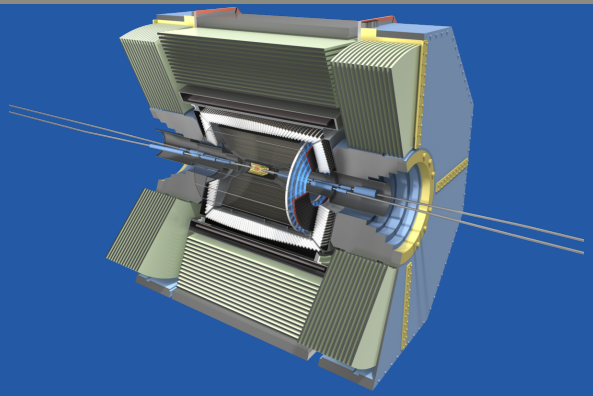

Ereignis 19

$\not{E} = 52.8$

$\nwarrow\!\!\searrow = 0.19$

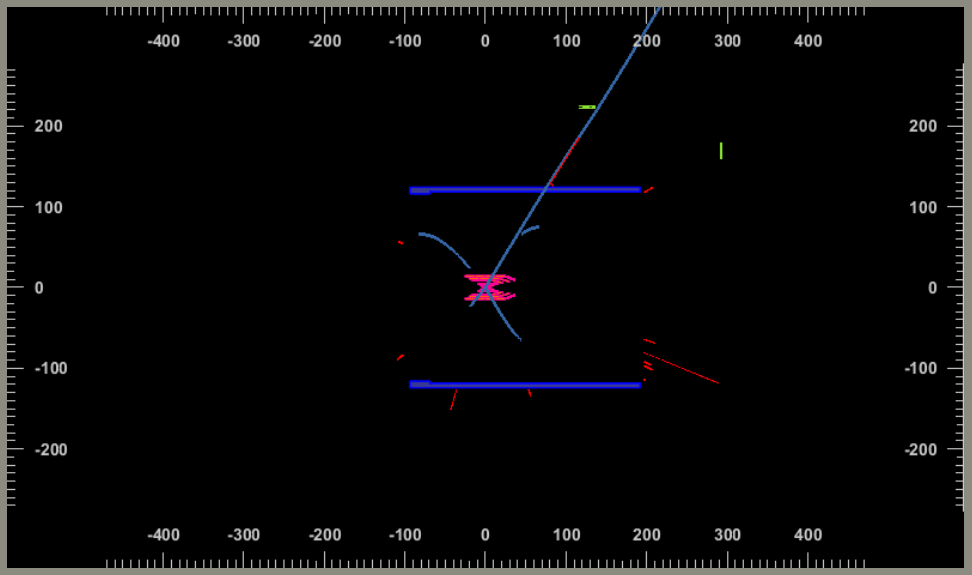

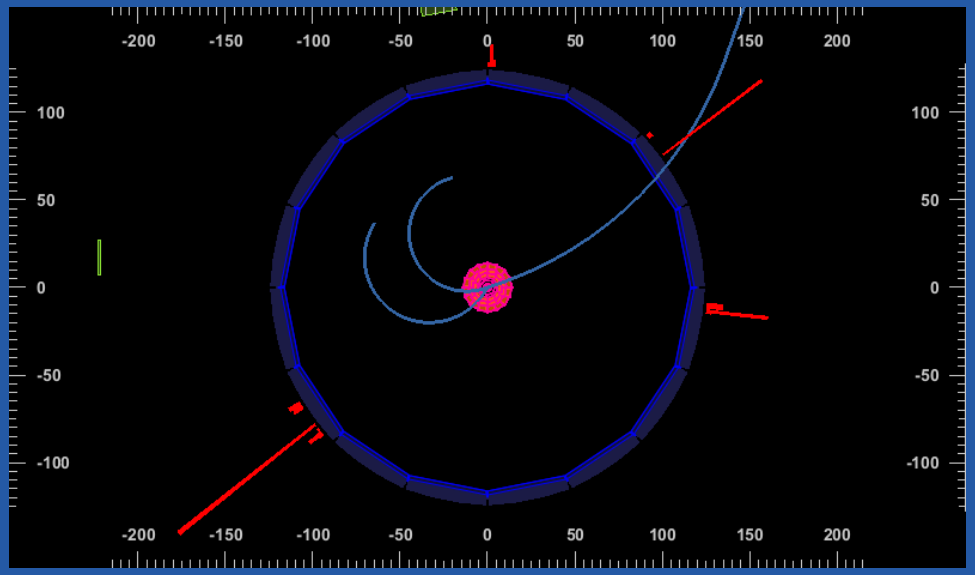

Belle II

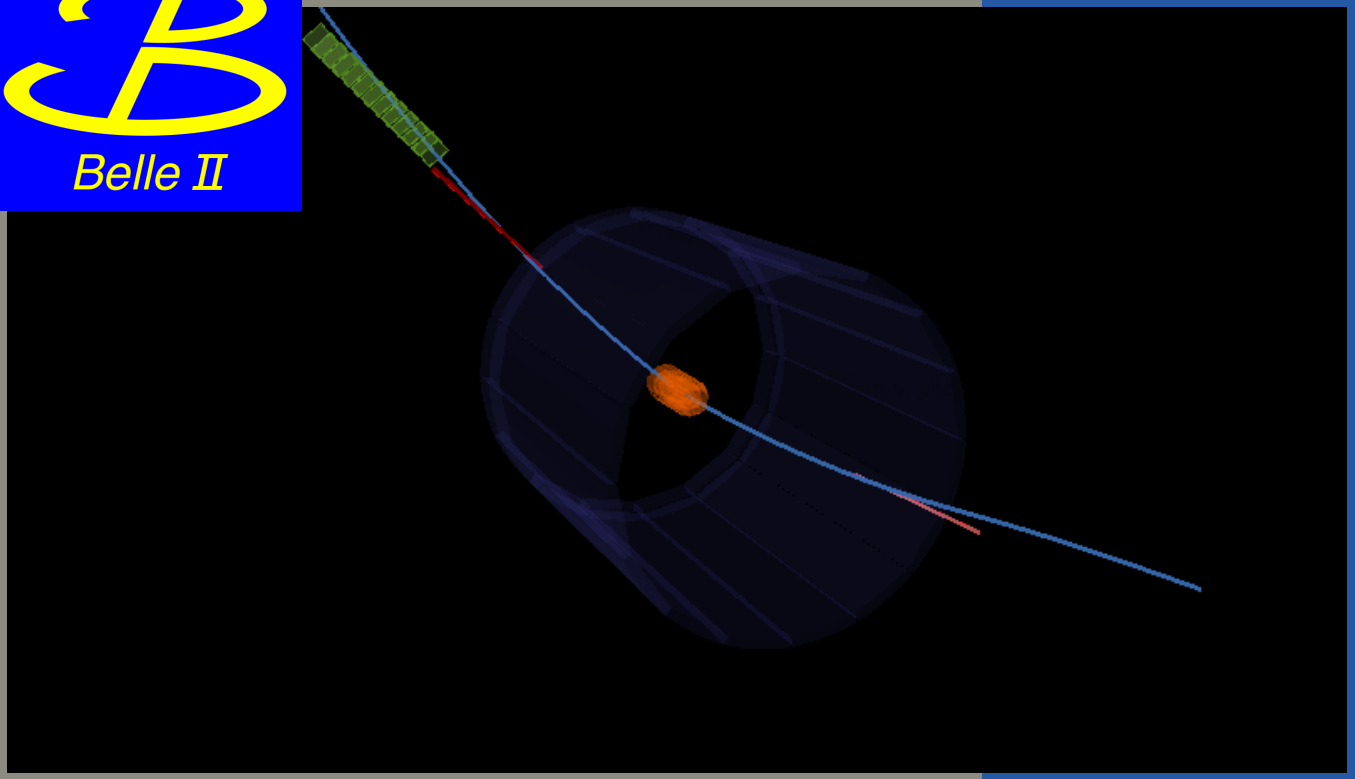

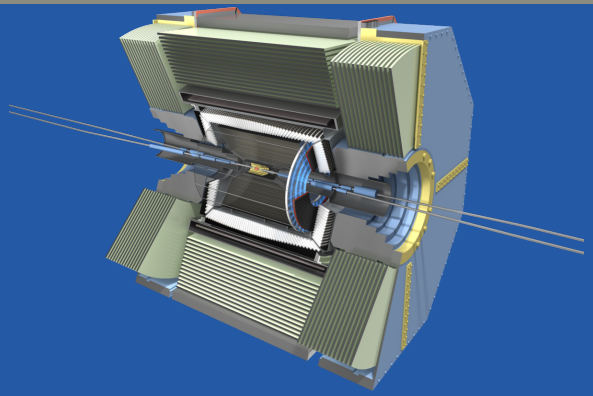

Ereignis 20

$\not{E} = 0.3$

$\nwarrow\!\!\searrow = 0.75$

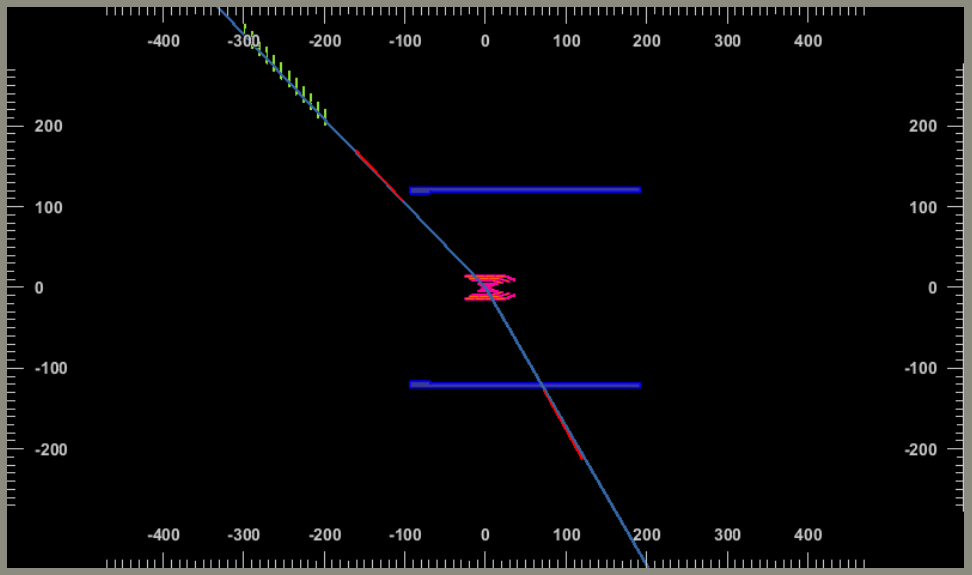

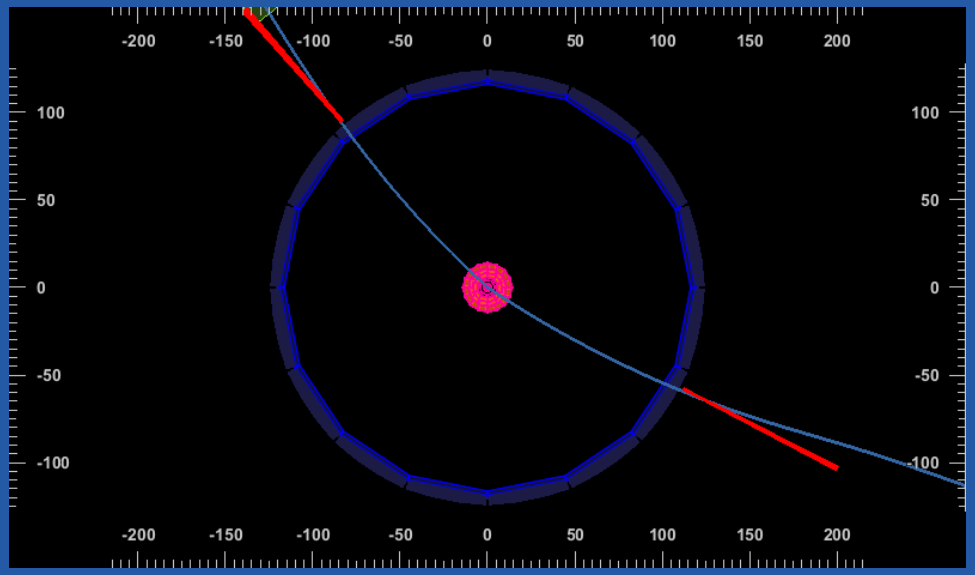

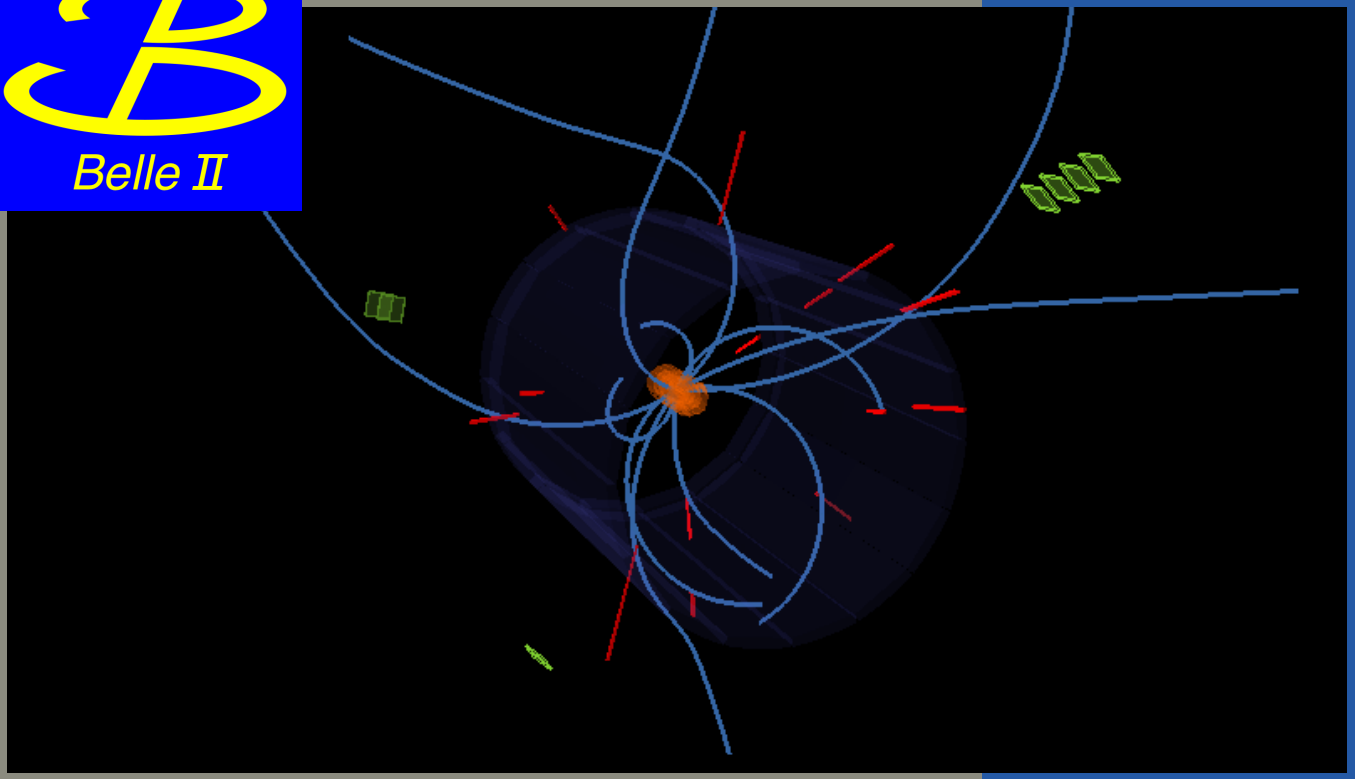

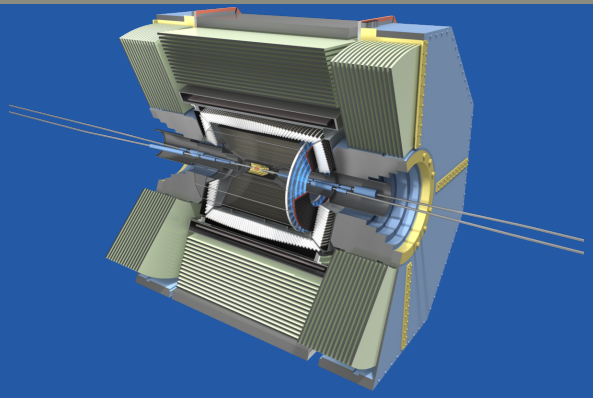

Ereignis 21

$\not{E} = 1.2$

$\nwarrow\!\!\searrow = 0.21$

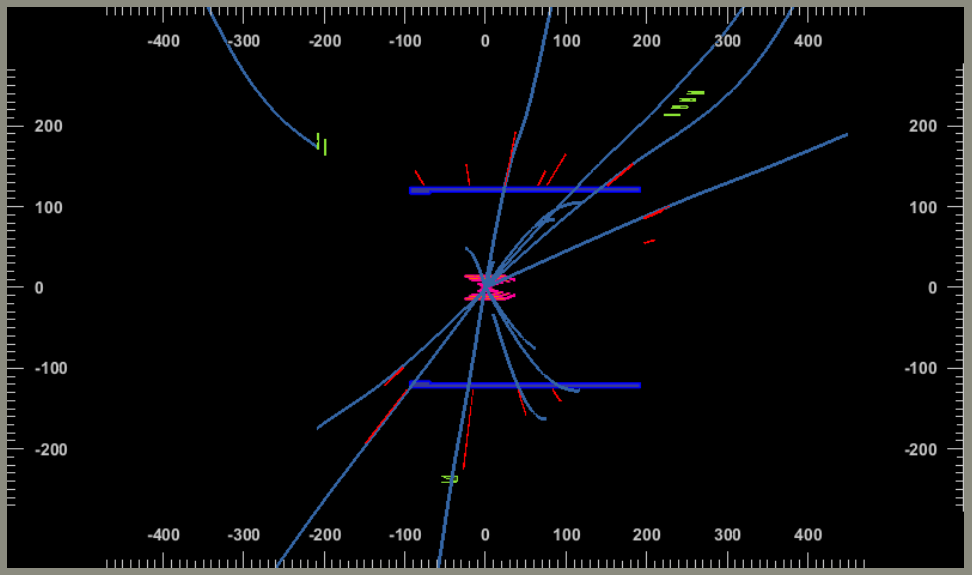

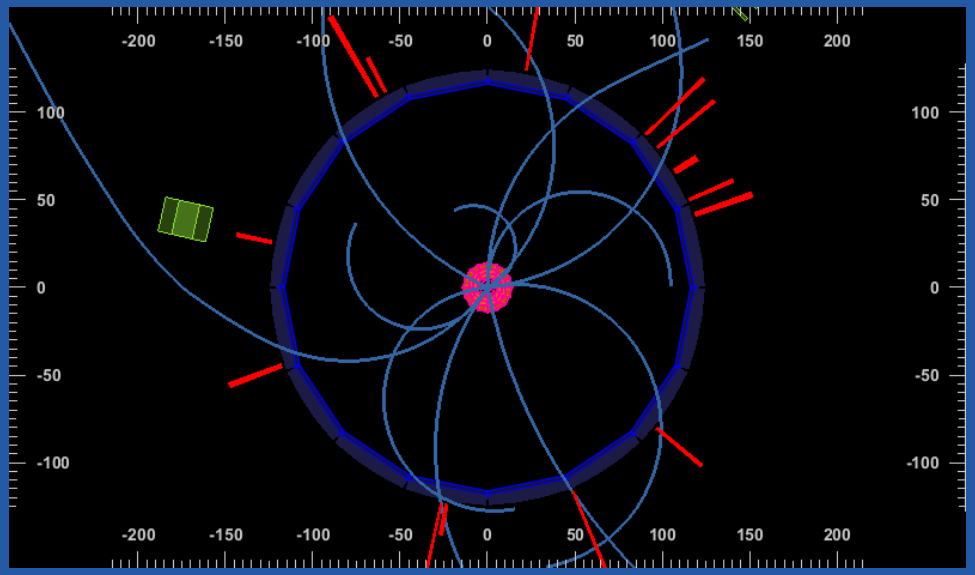

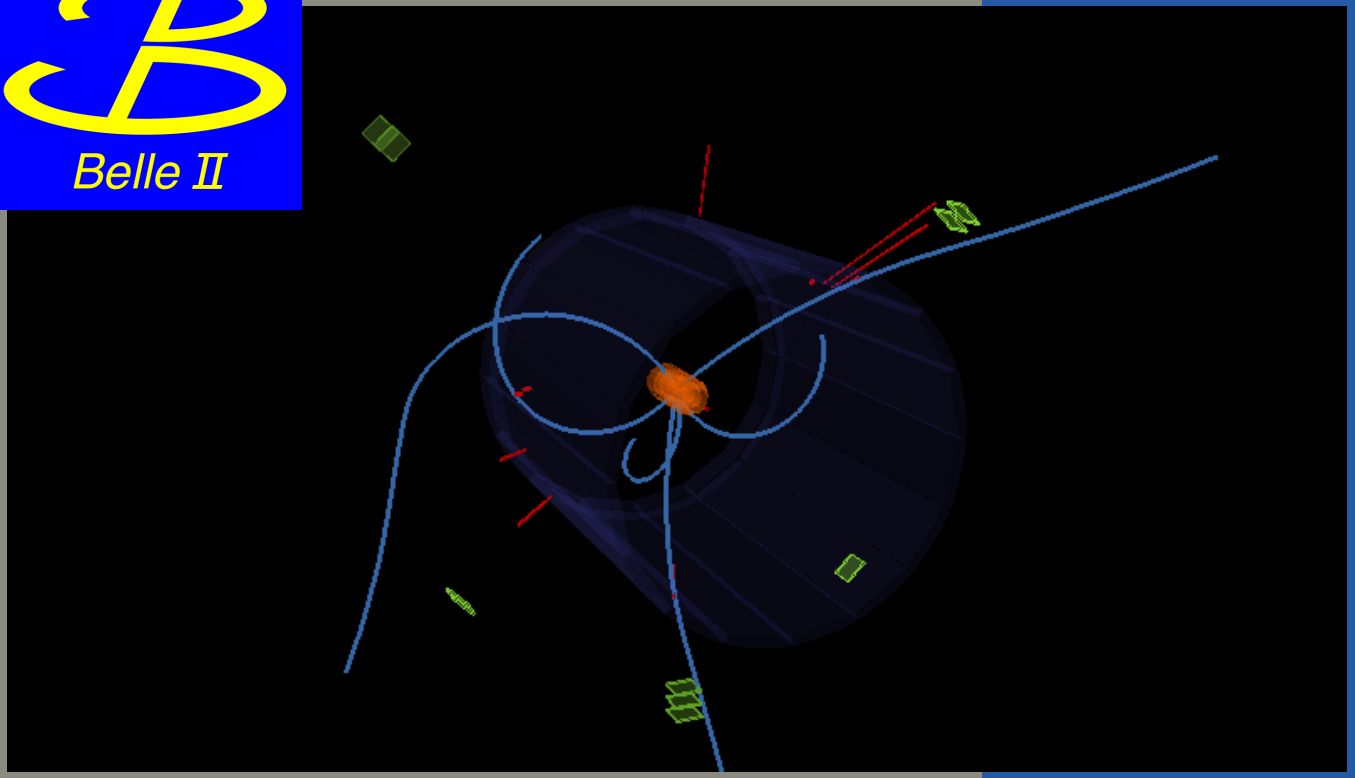

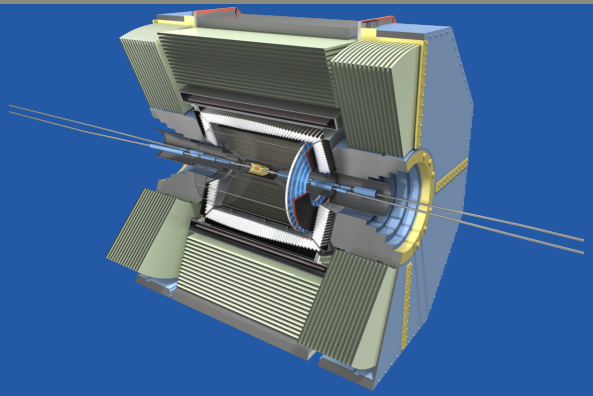

Ereignis 22

$\not{E} = 2.7$

$\nwarrow\!\!\searrow = 0.5$

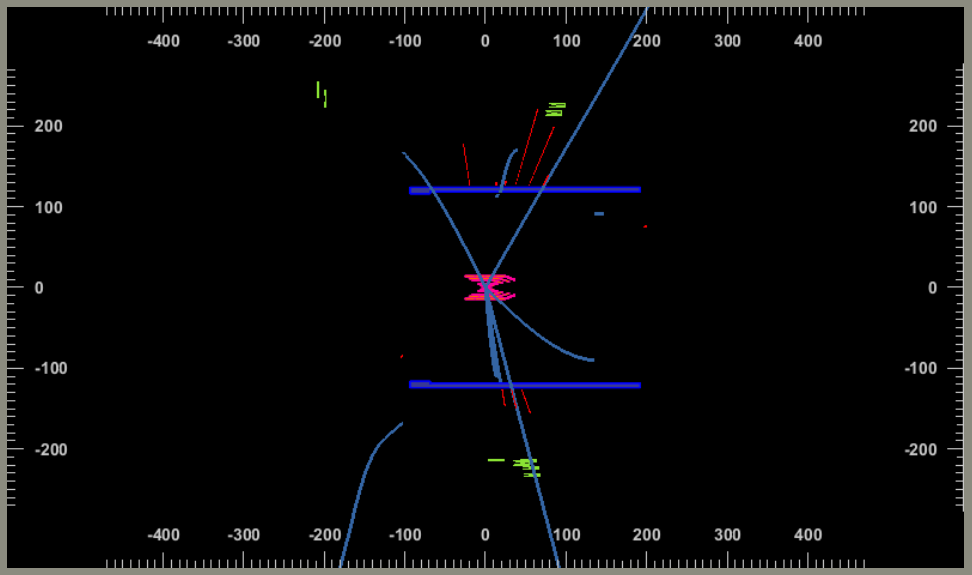

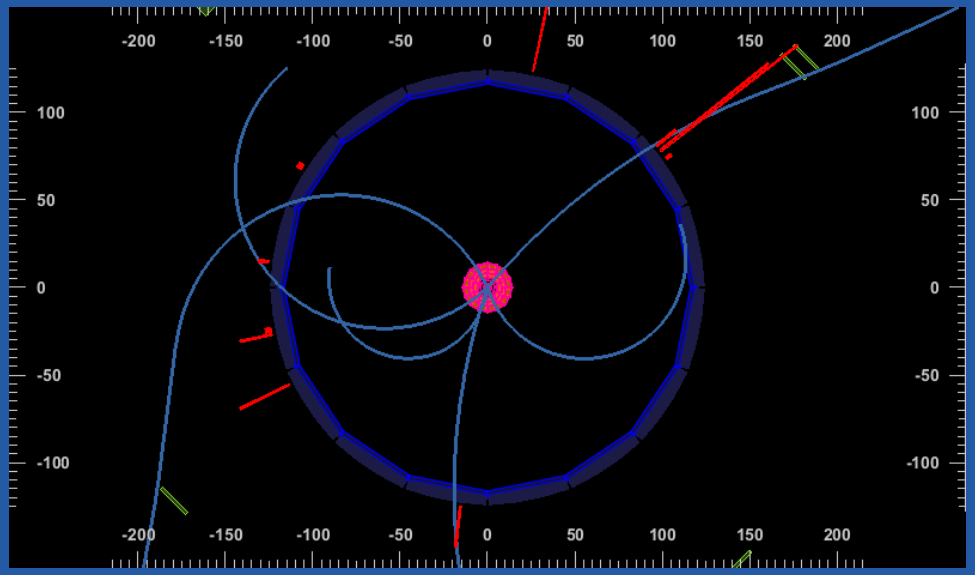

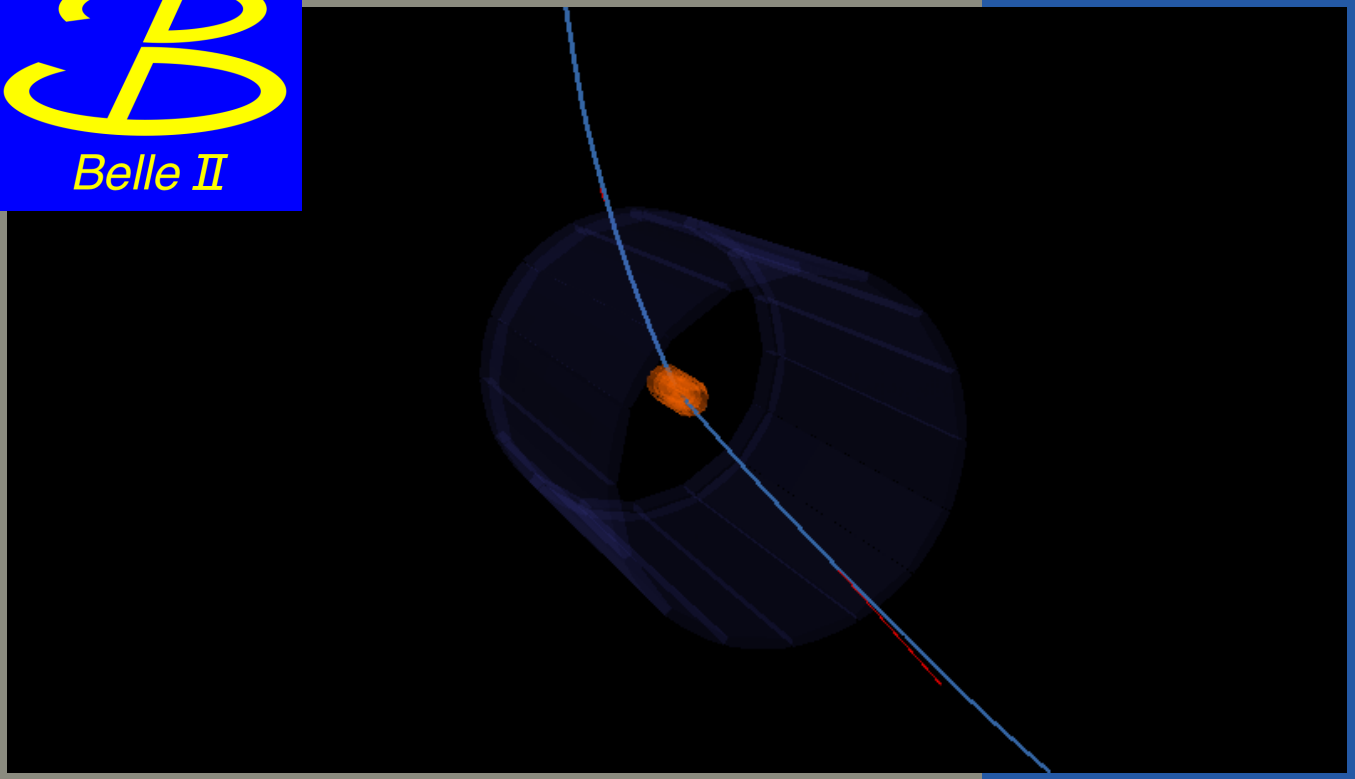

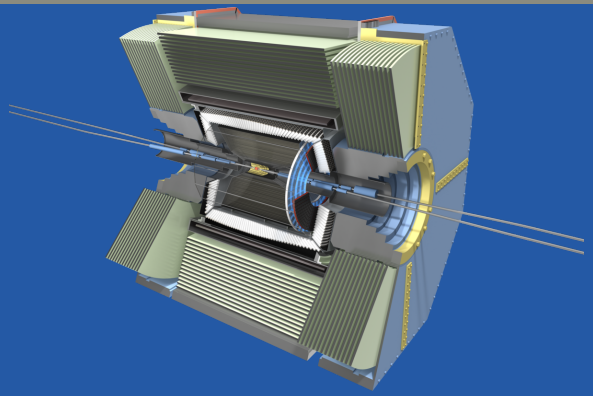

Ereignis 23

$\not{E} = 0.4$

$\nwarrow\!\!\searrow = 1.0$

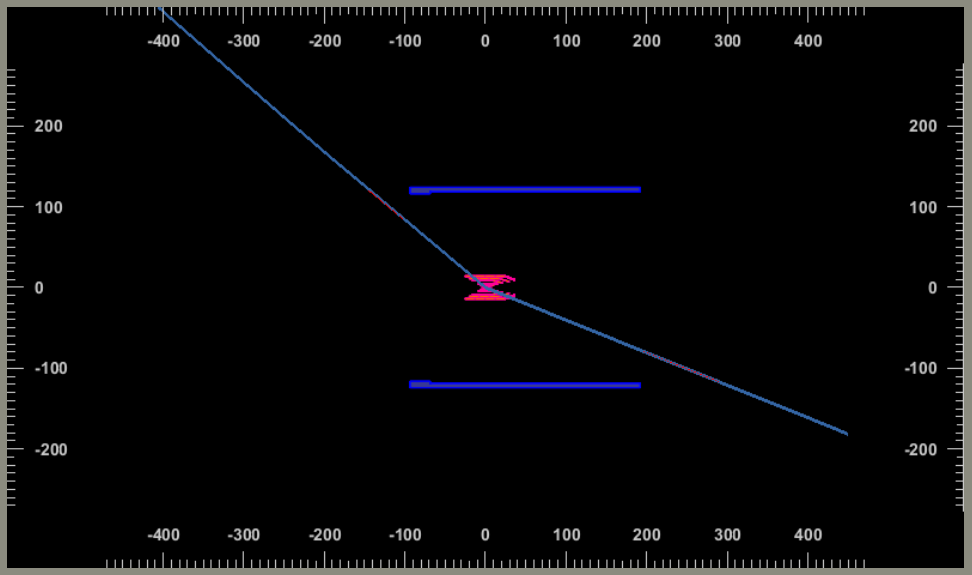

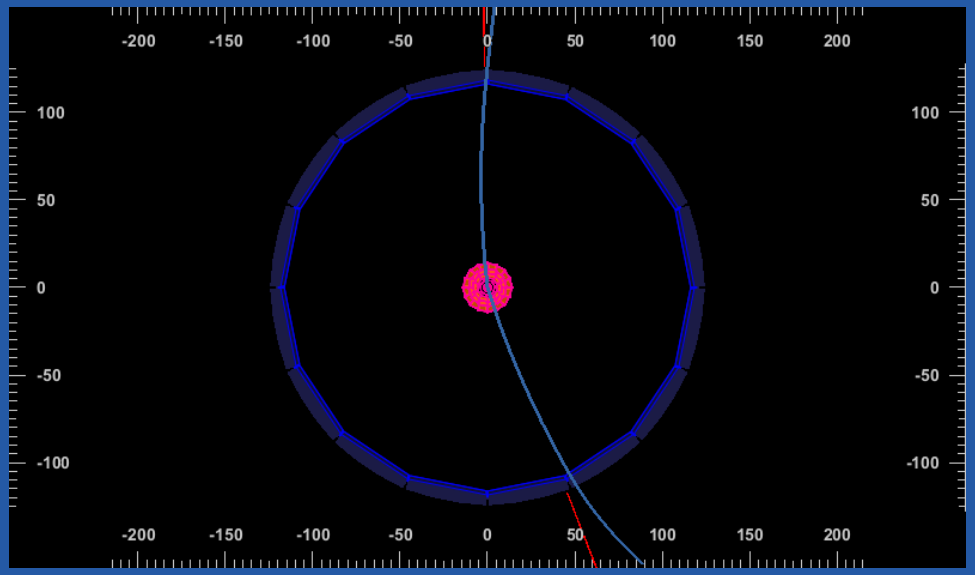

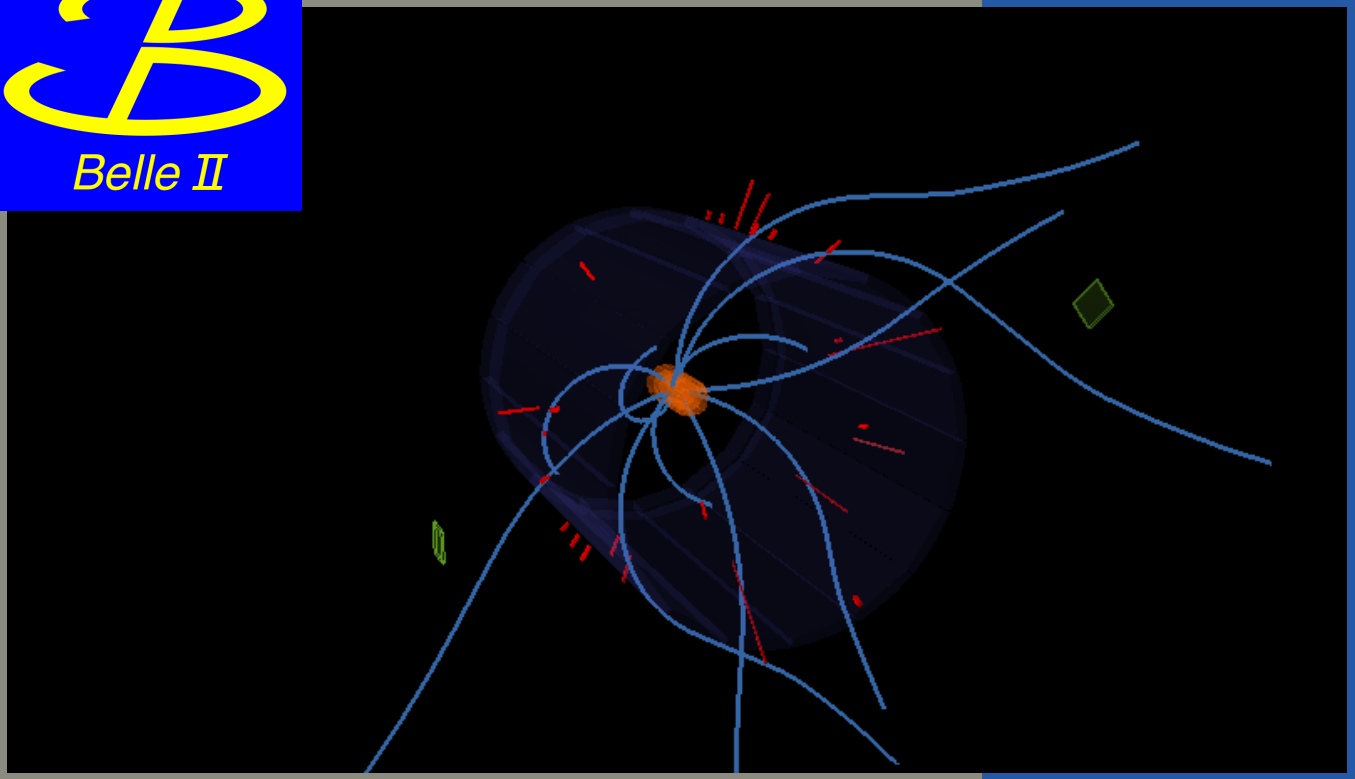

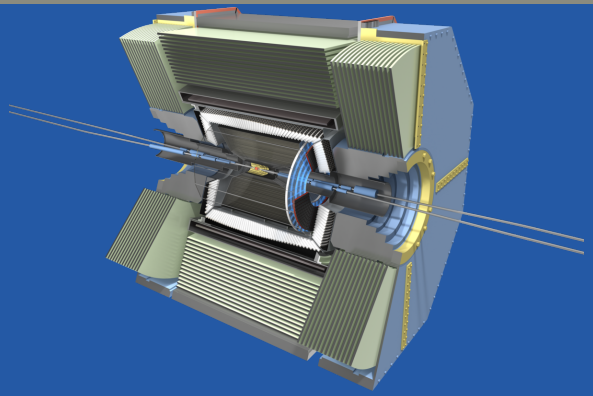

Ereignis 24

$\not{E} = 2.5$

$\nwarrow\!\!\searrow = 0.23$

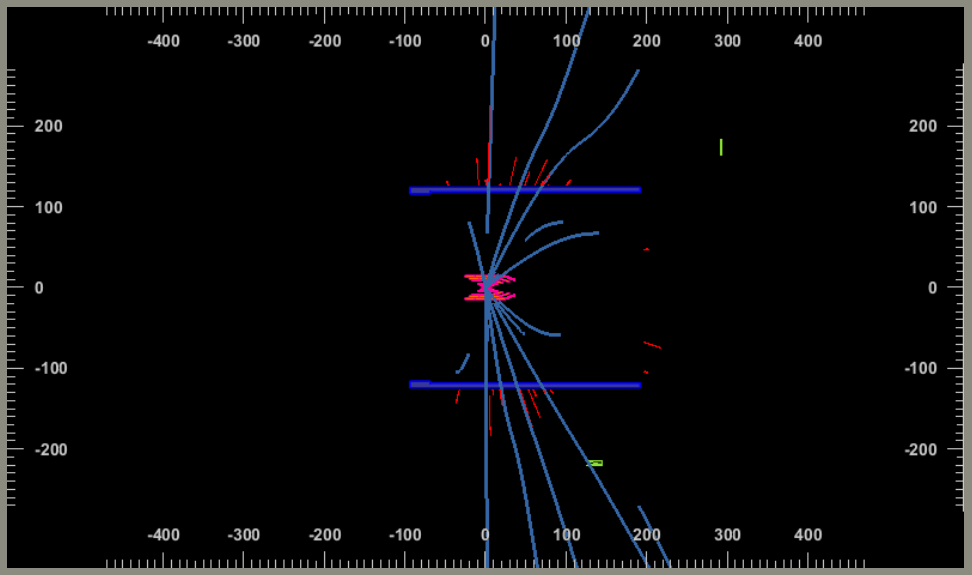

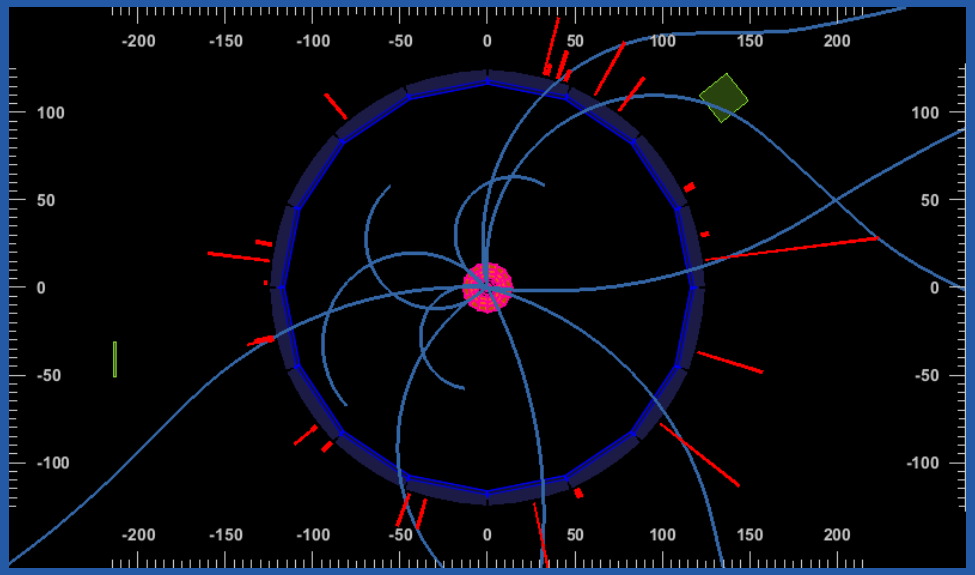

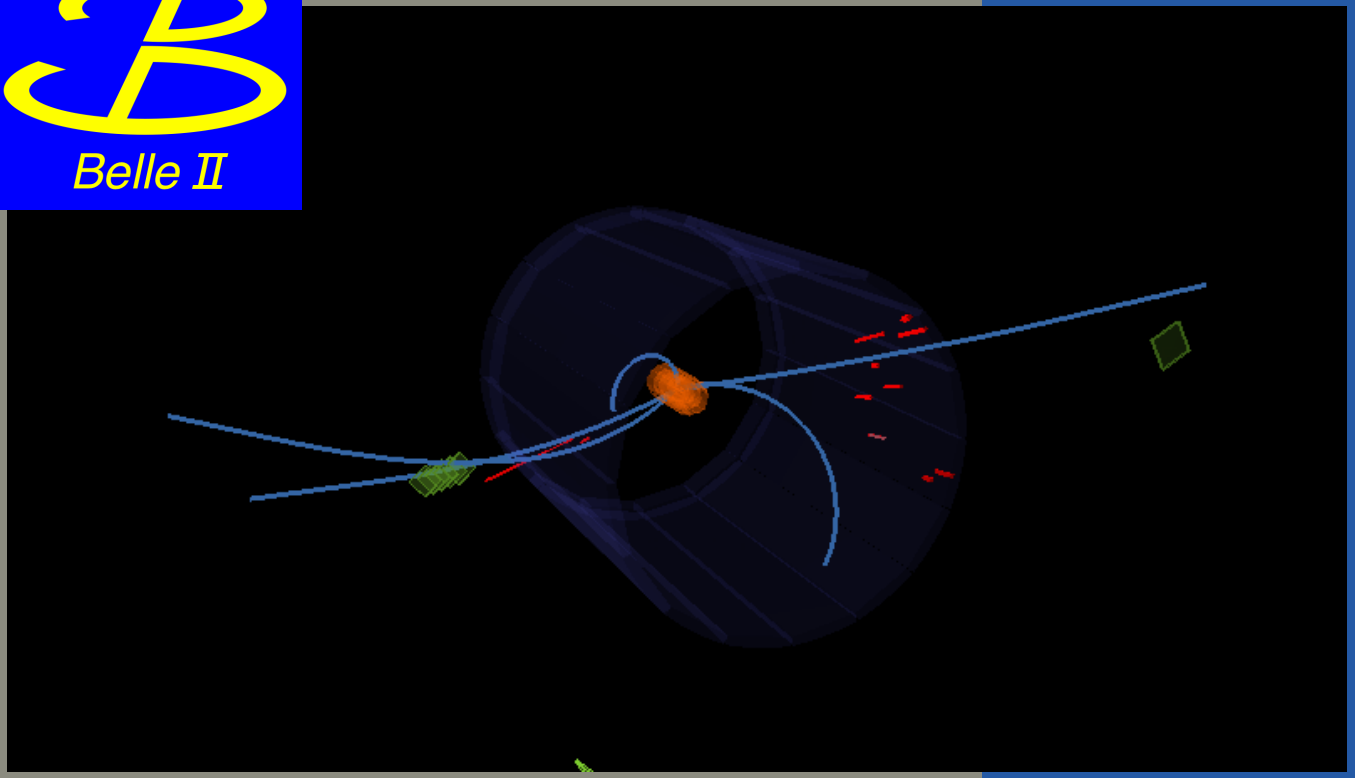

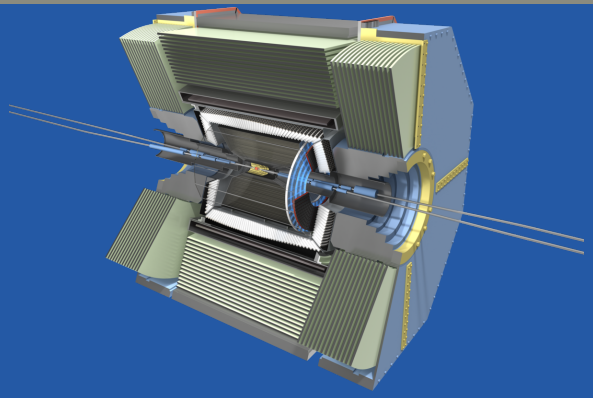

Ereignis 25

$\not{E} = -0.8$

$\nwarrow\!\!\searrow = 0.87$

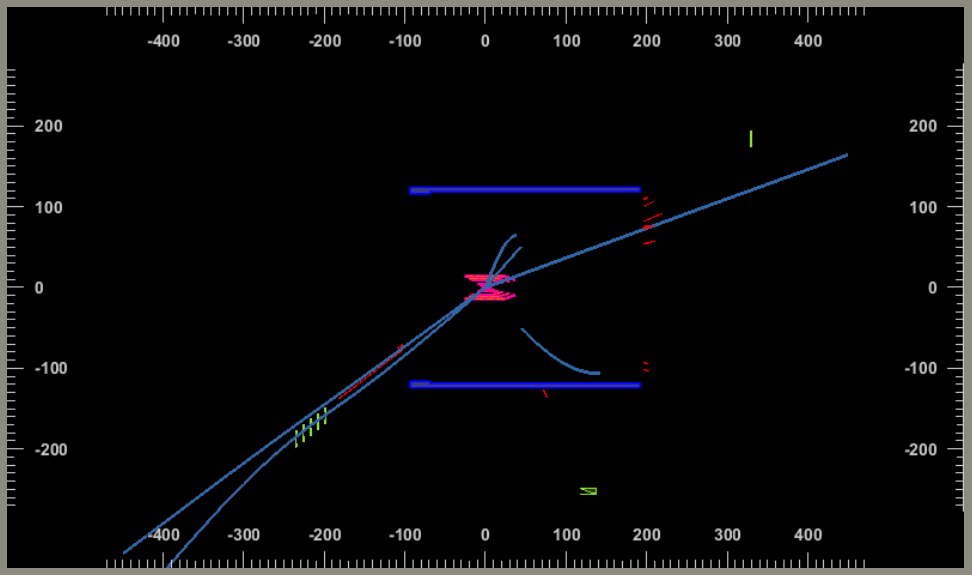

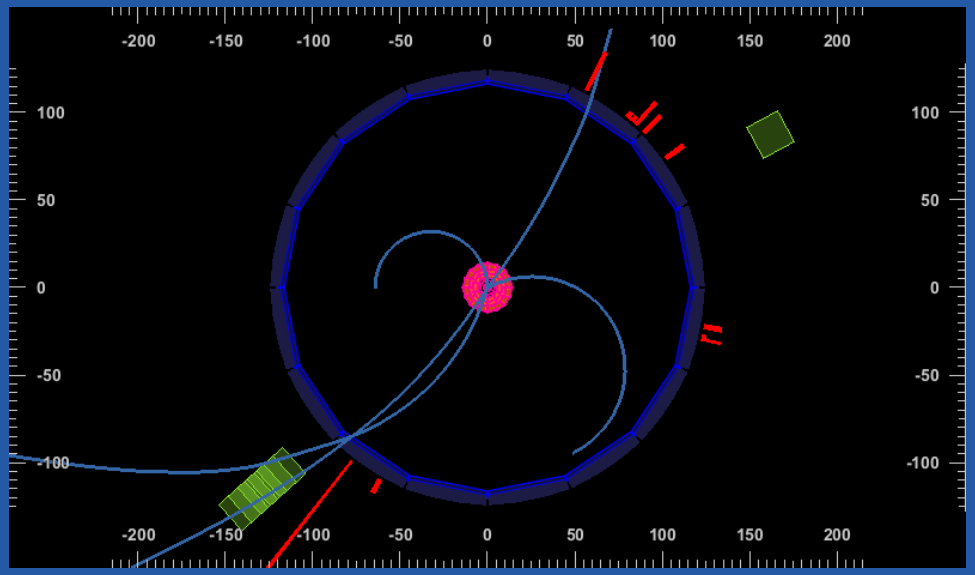

Belle II

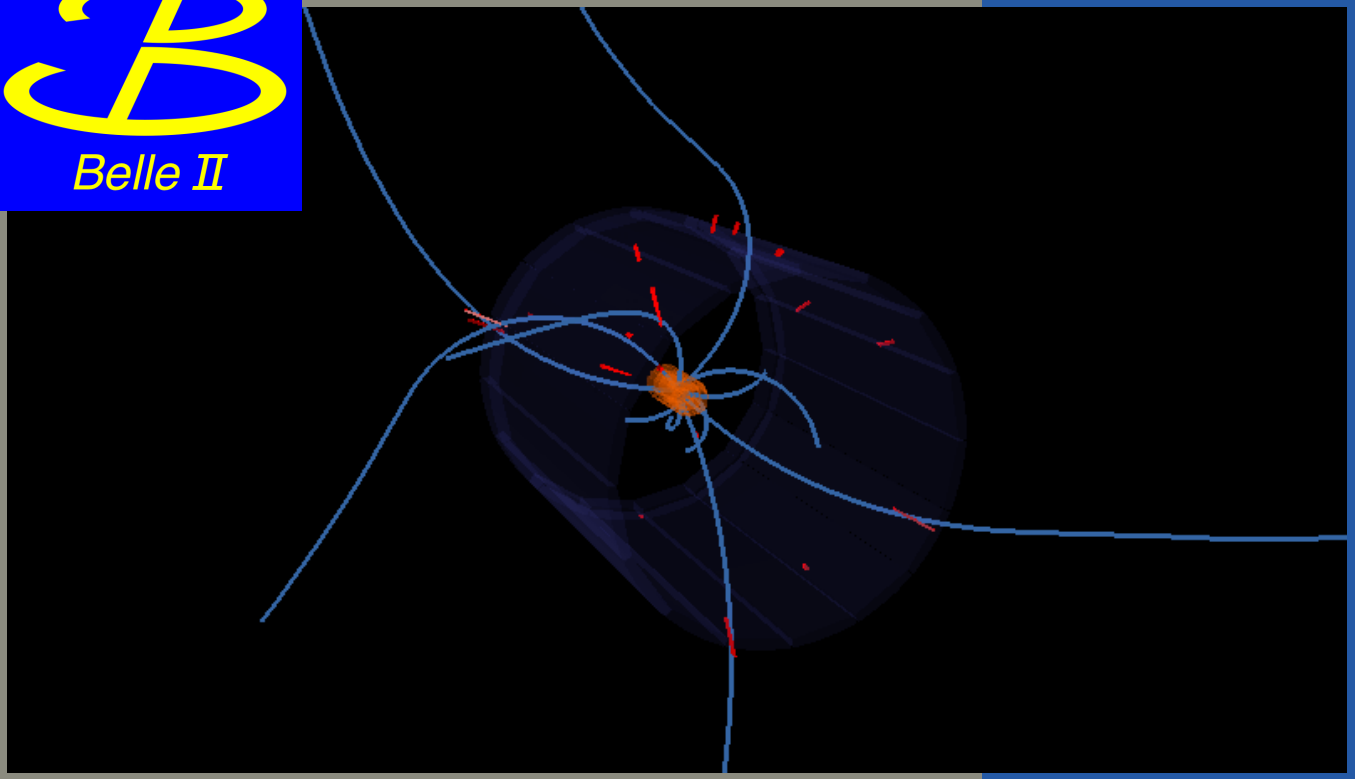

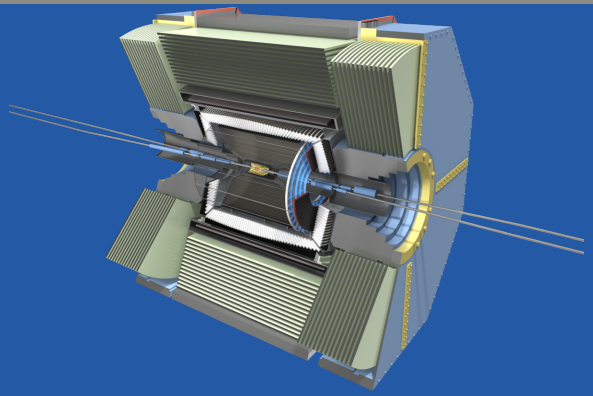

Ereignis 26

$\not{E} = -2.7$

$\nwarrow\!\!\searrow = 0.07$

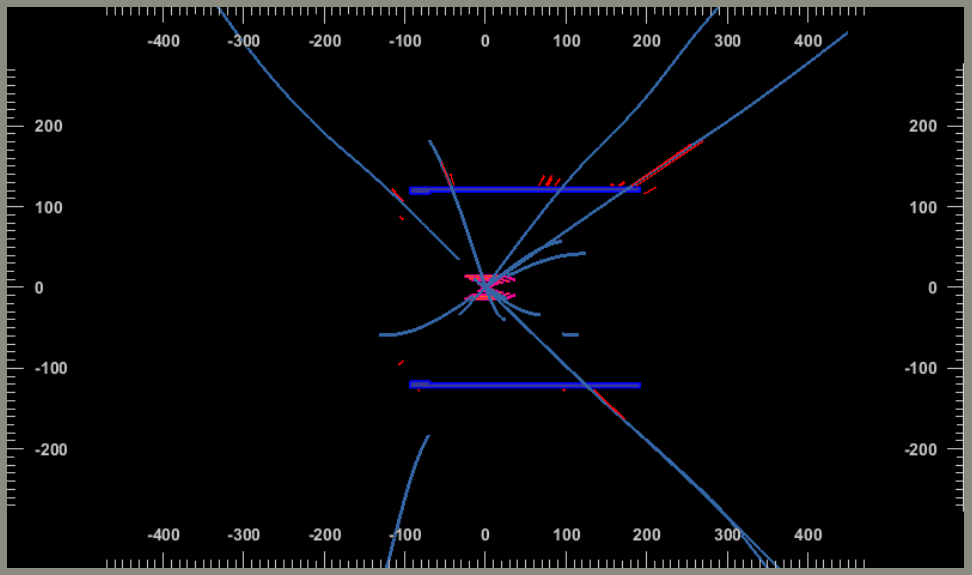

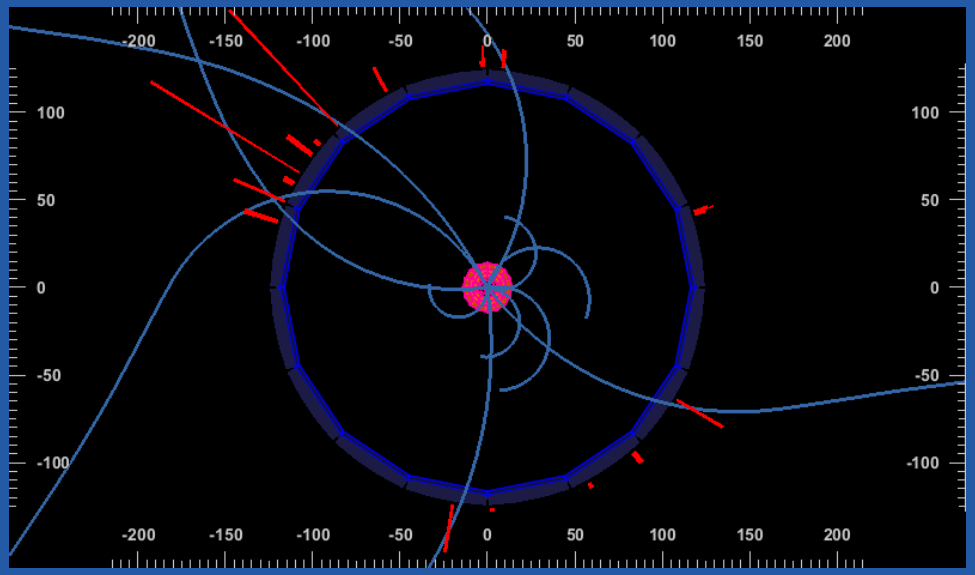

Belle II

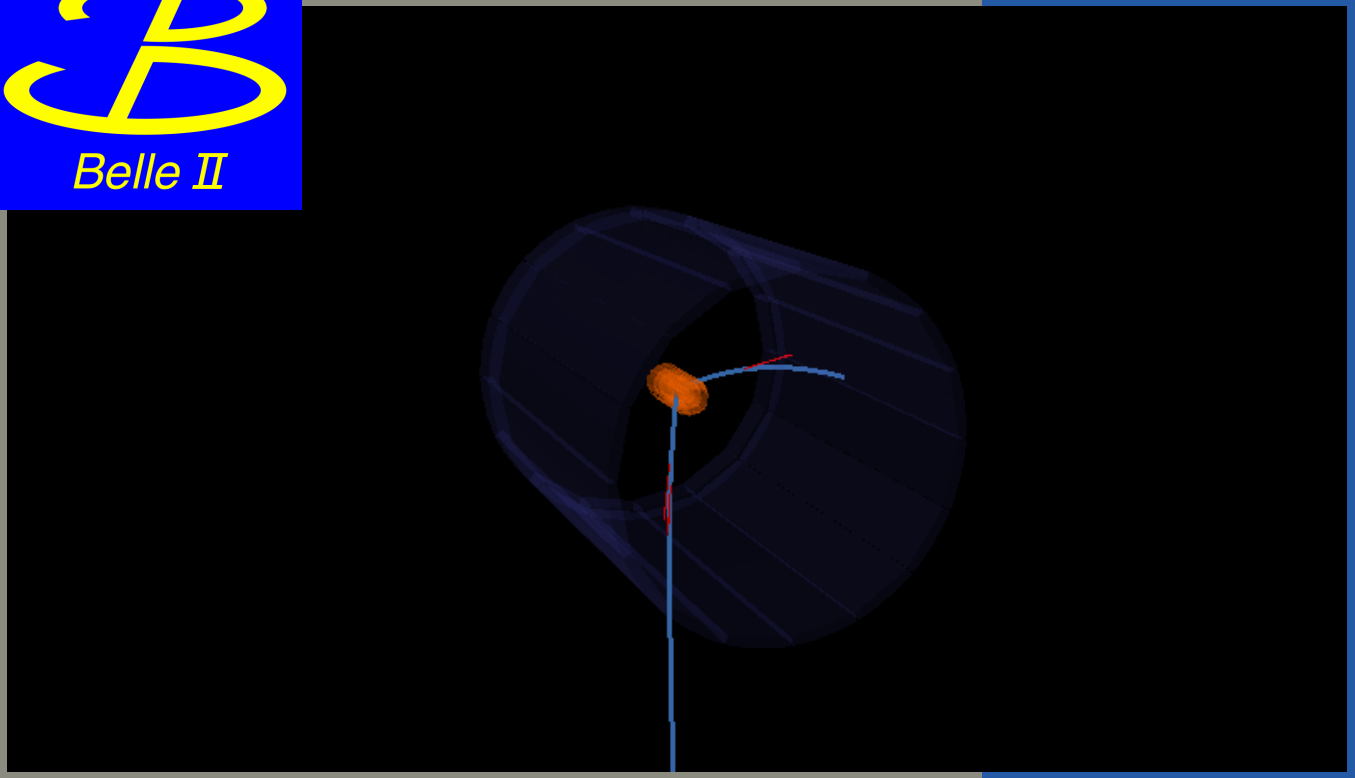

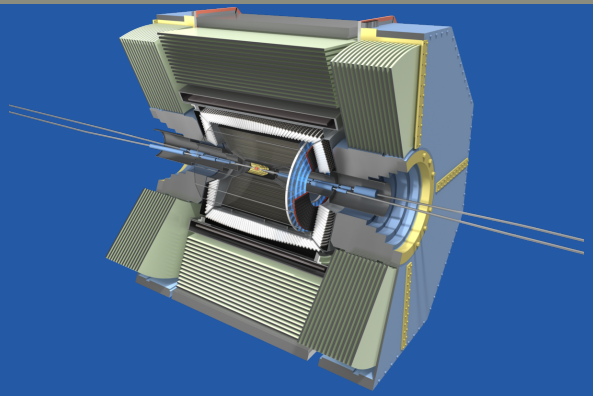

Ereignis 27

$\not{E} = -0.0$

$\nwarrow\!\!\searrow = 1.0$

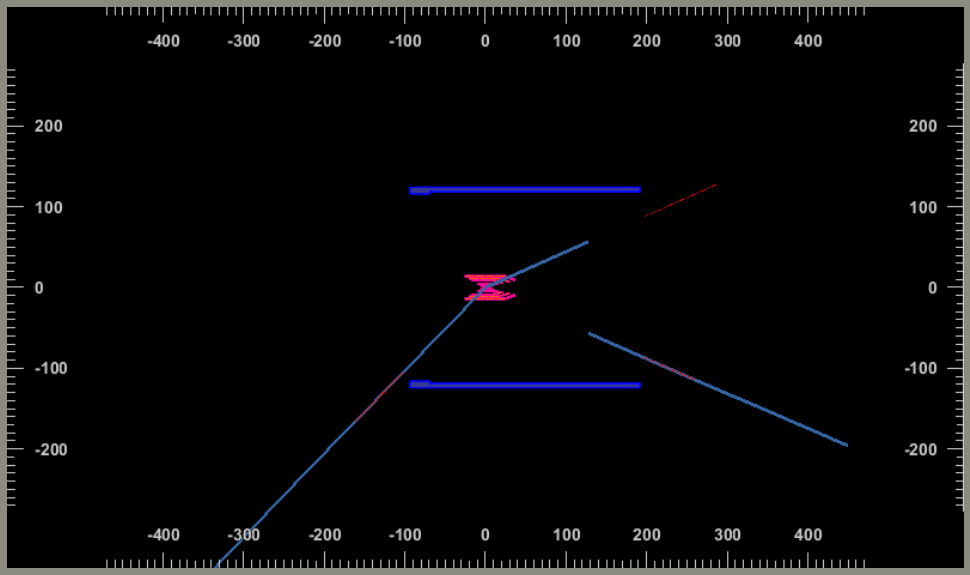

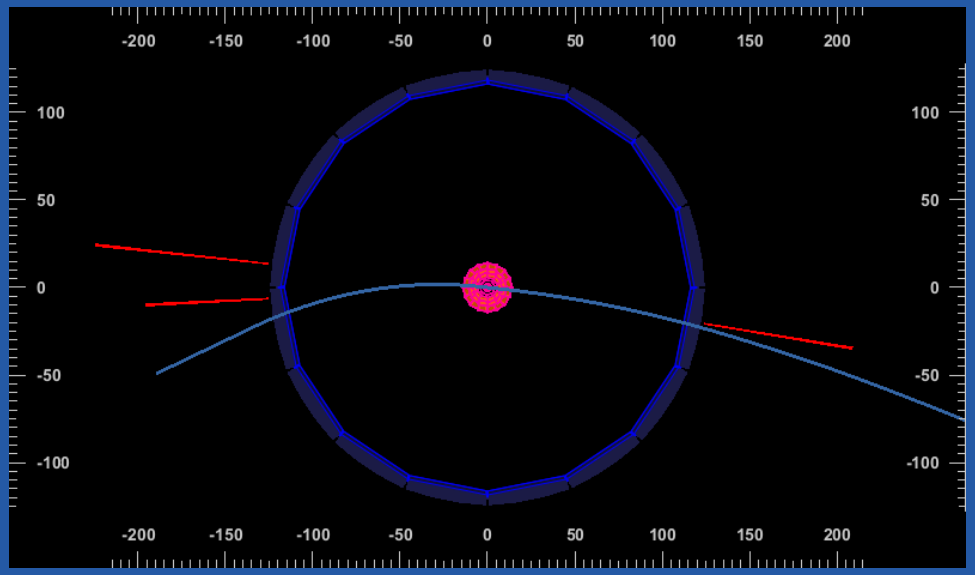

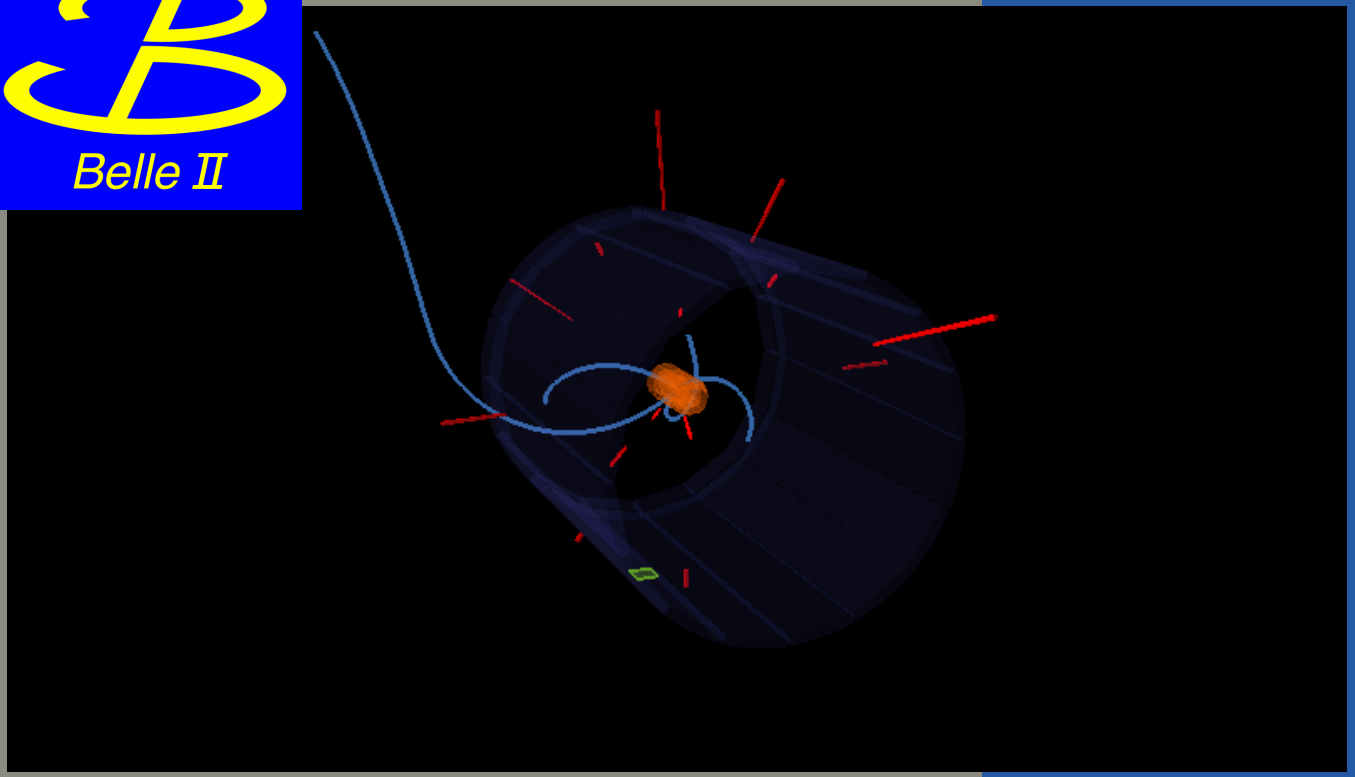

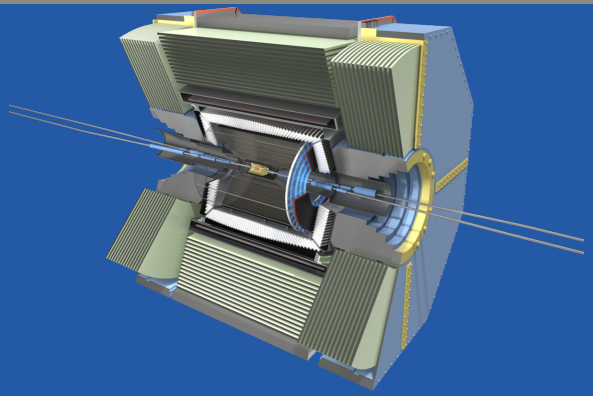

Ereignis 28

$\not{E} = 54.3$

$\nwarrow\!\!\searrow = 0.18$

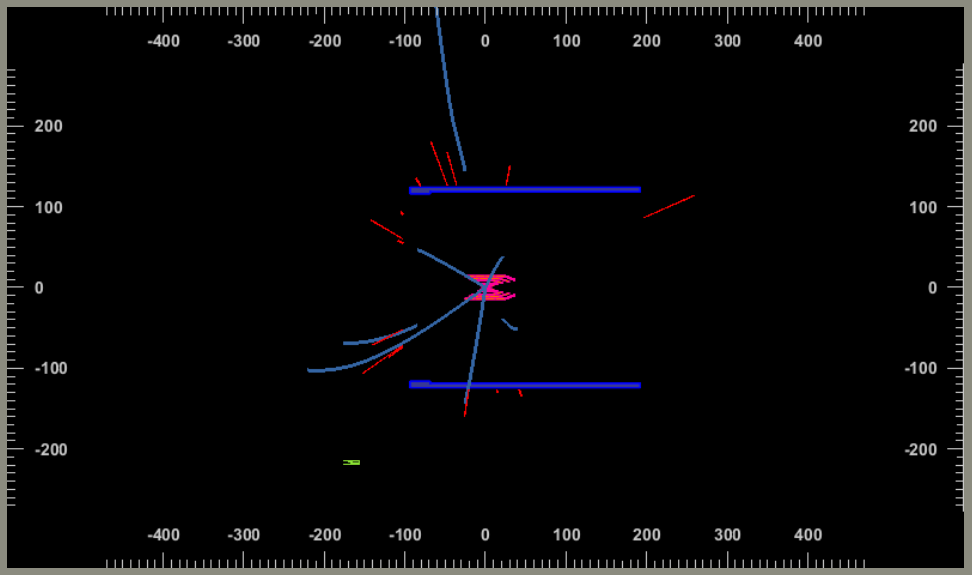

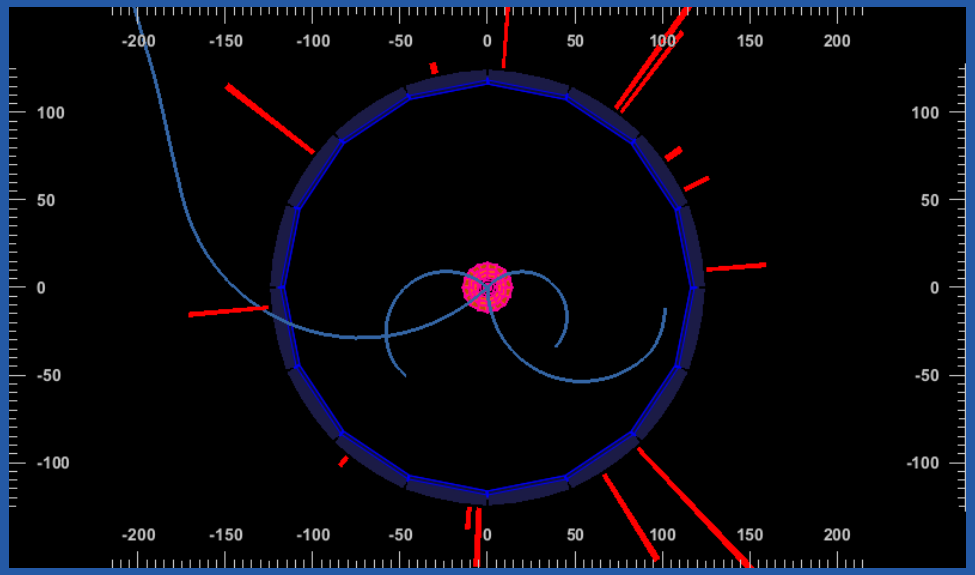

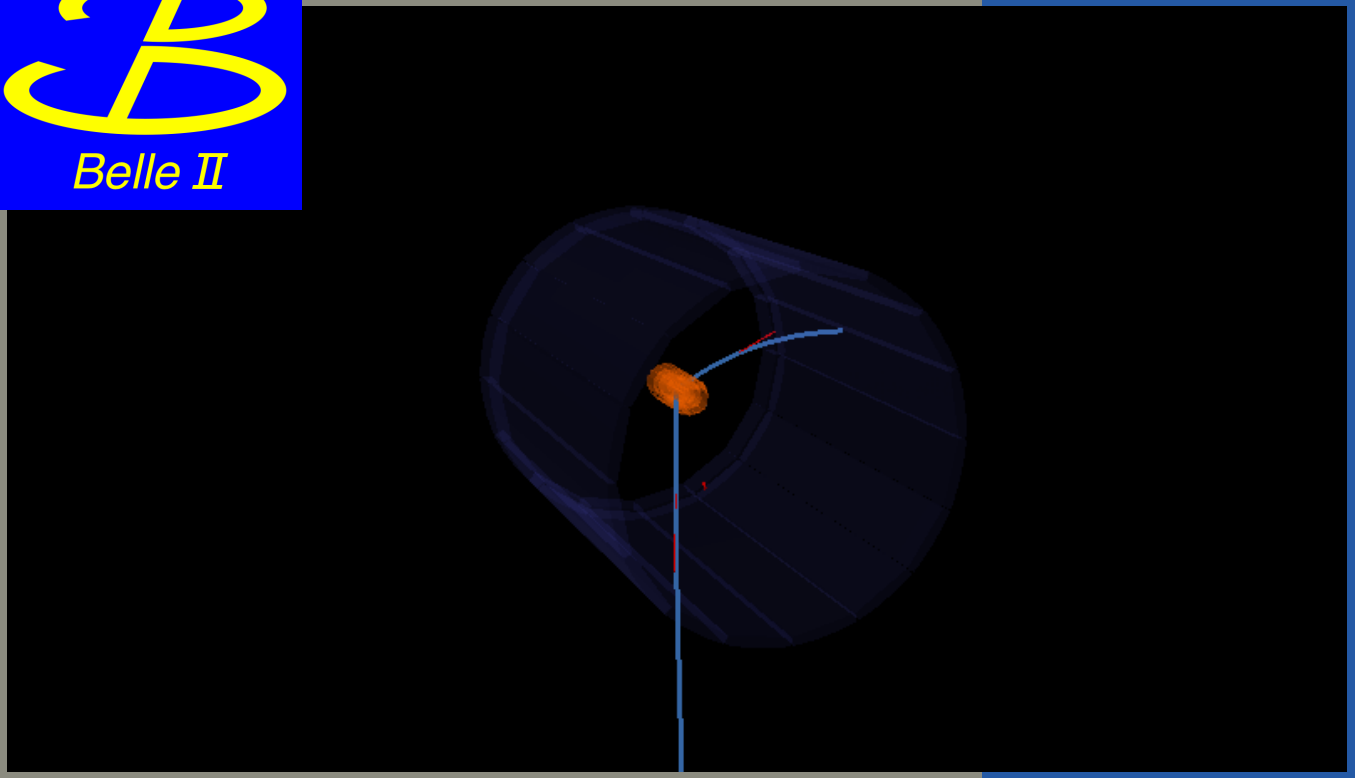

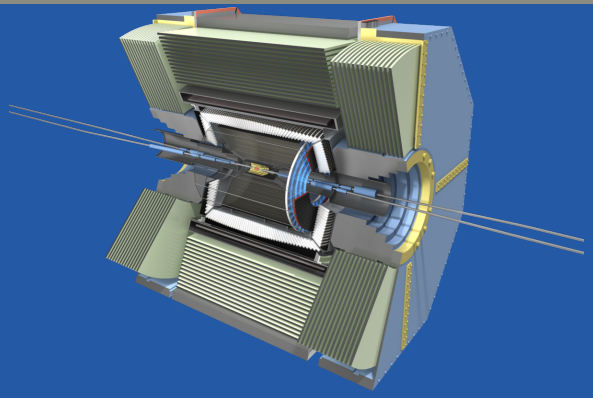

Ereignis 29

$\not{E} = -0.0$

$\nwarrow\!\!\searrow = 1.0$

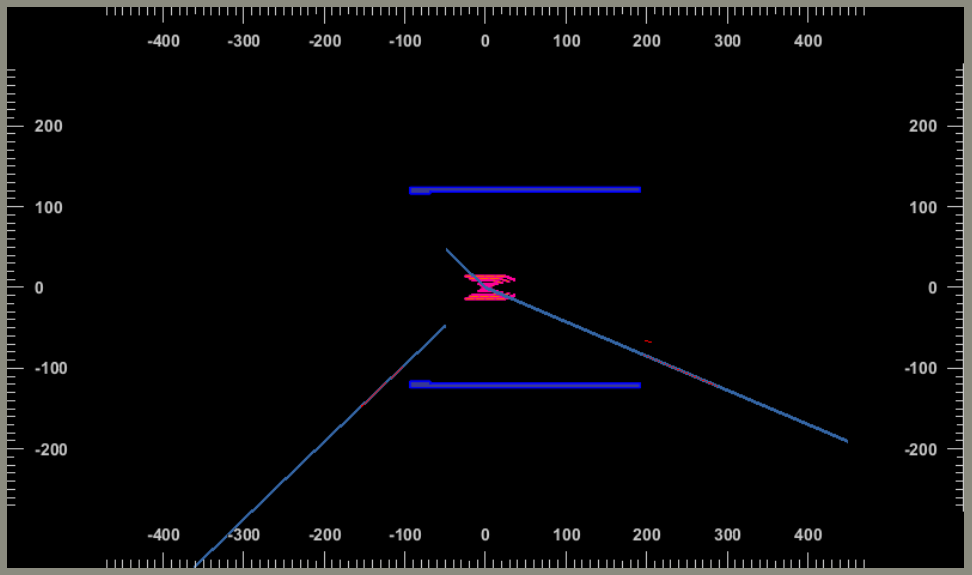

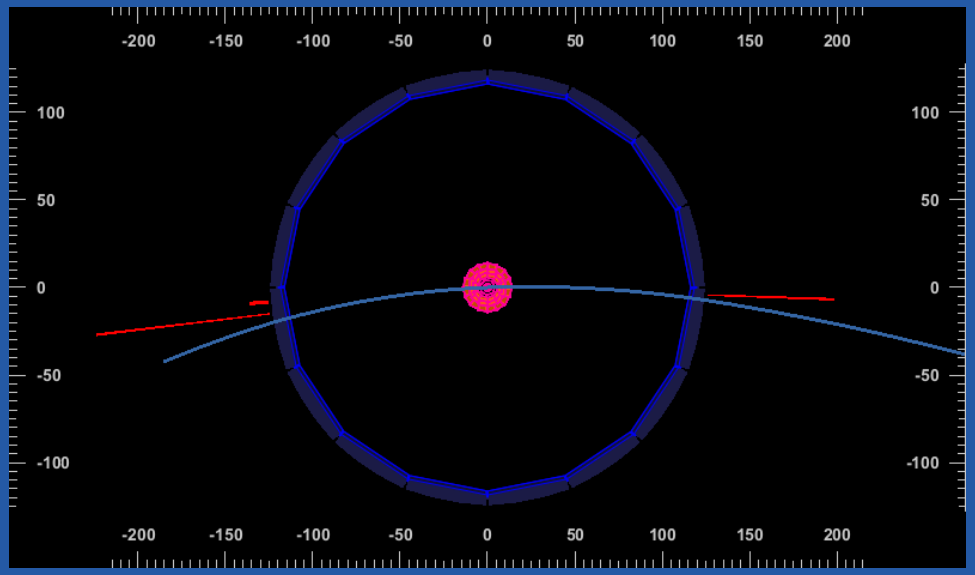

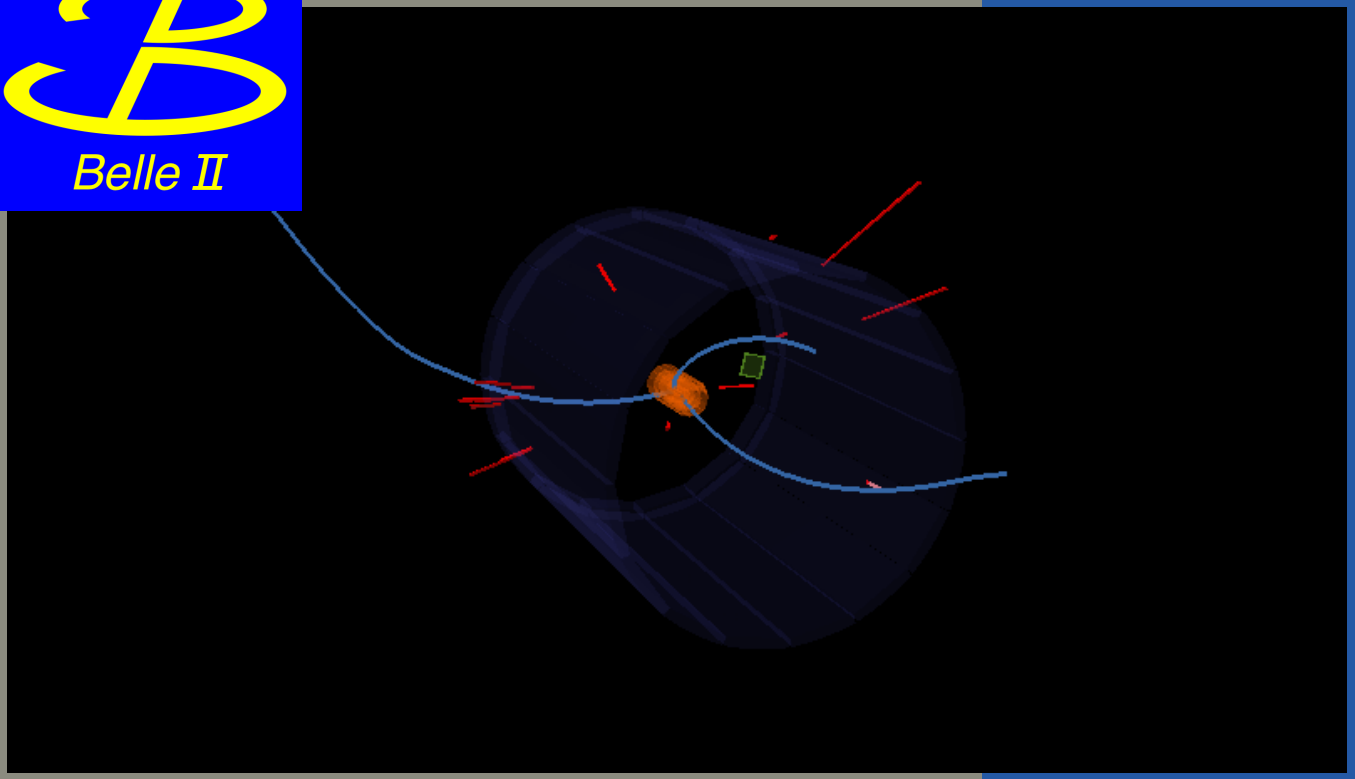

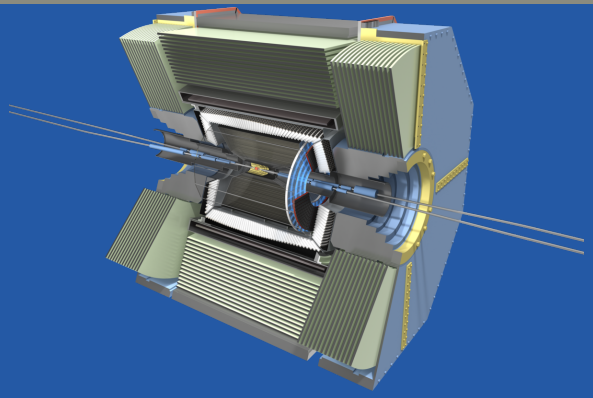

Ereignis 30

$\not{E} = 11.8$

$\nwarrow\!\!\searrow = 0.17$

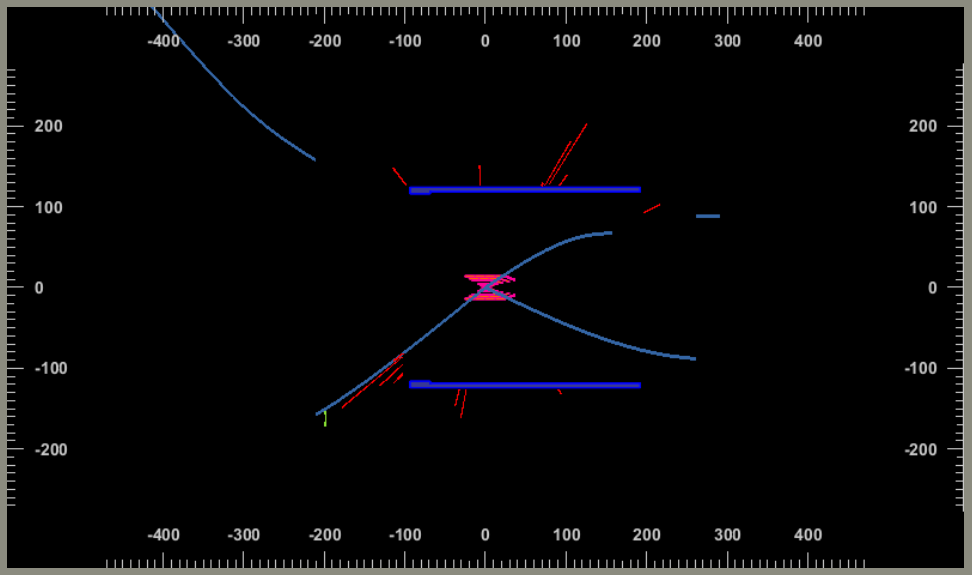

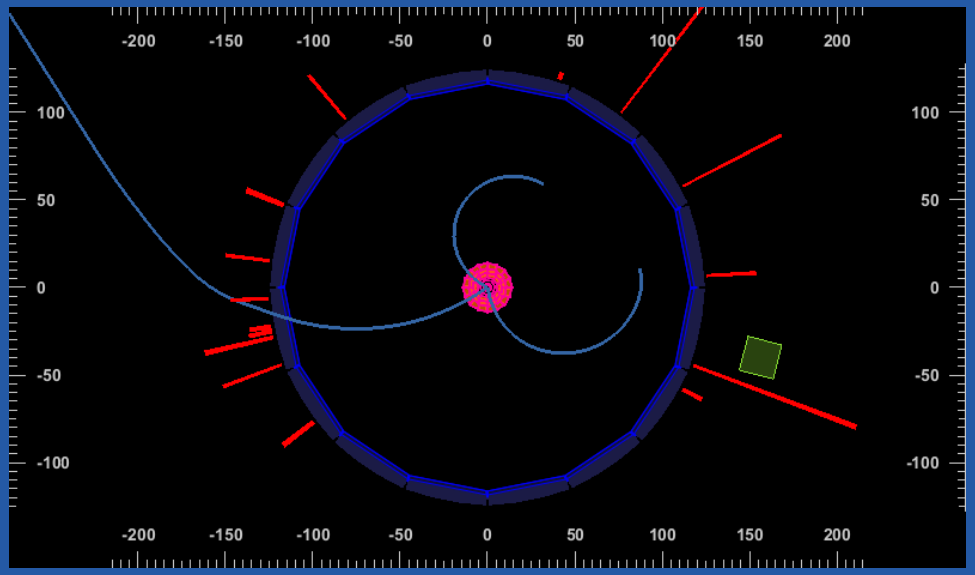

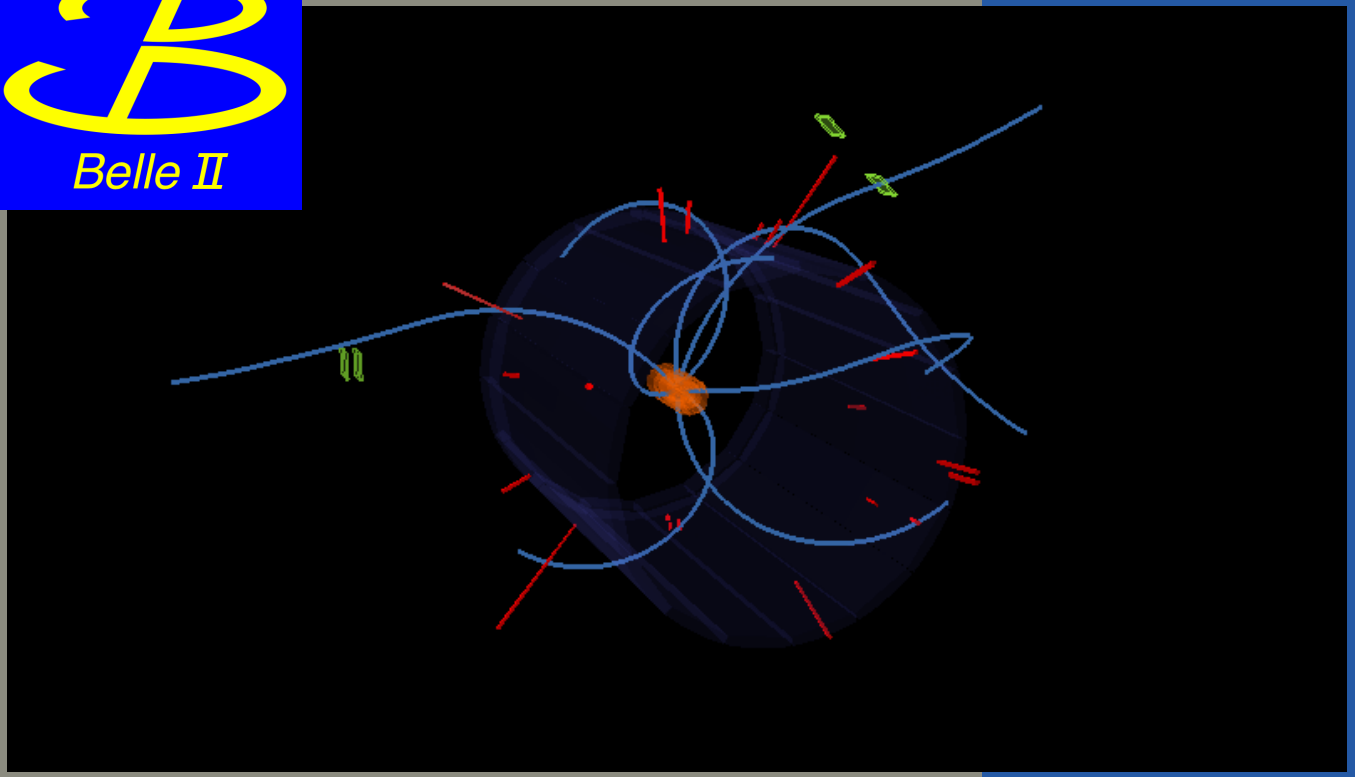

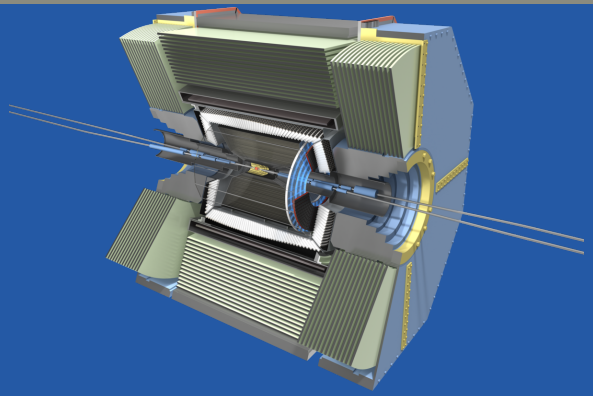

Ereignis 31

$\not{E} = 30.6$

$\nwarrow\!\!\searrow = 0.05$

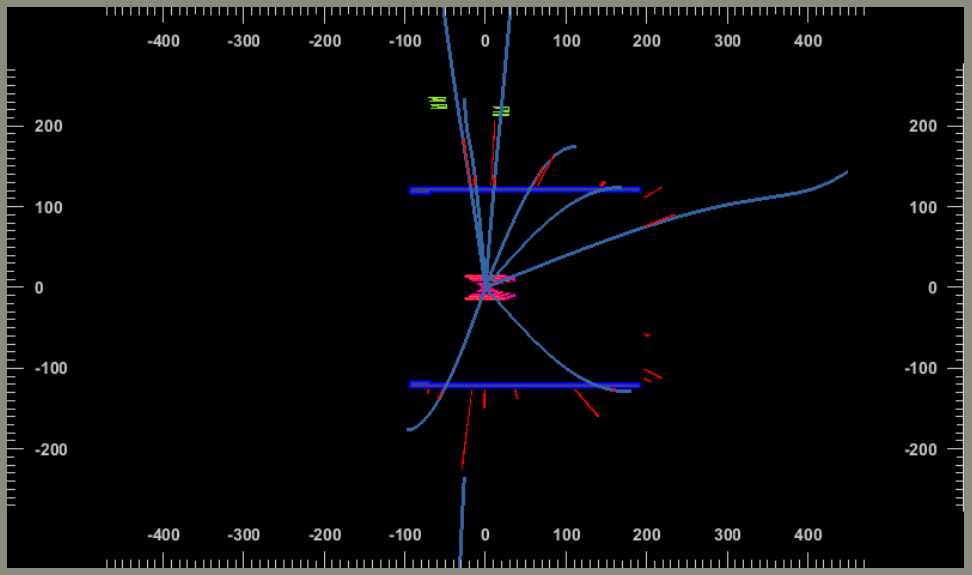

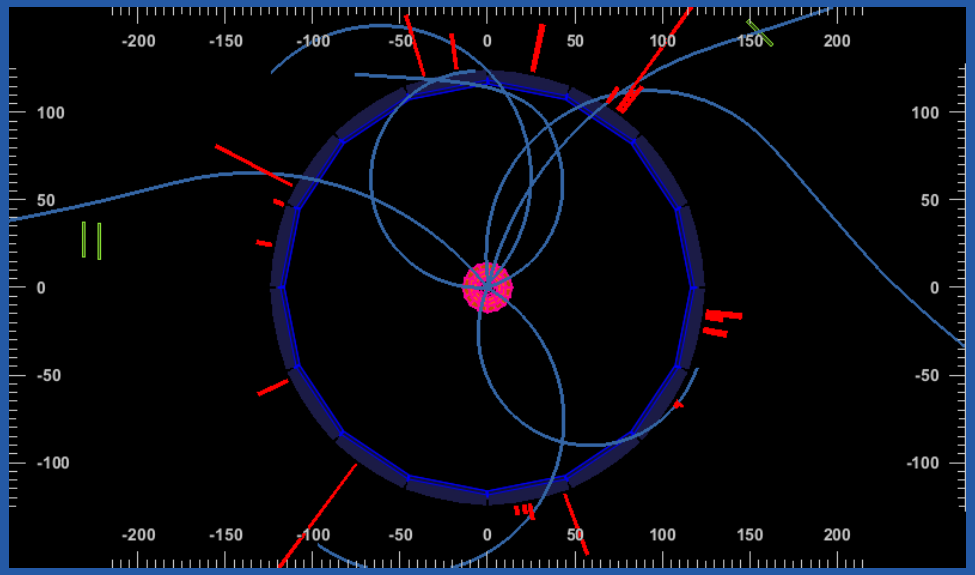

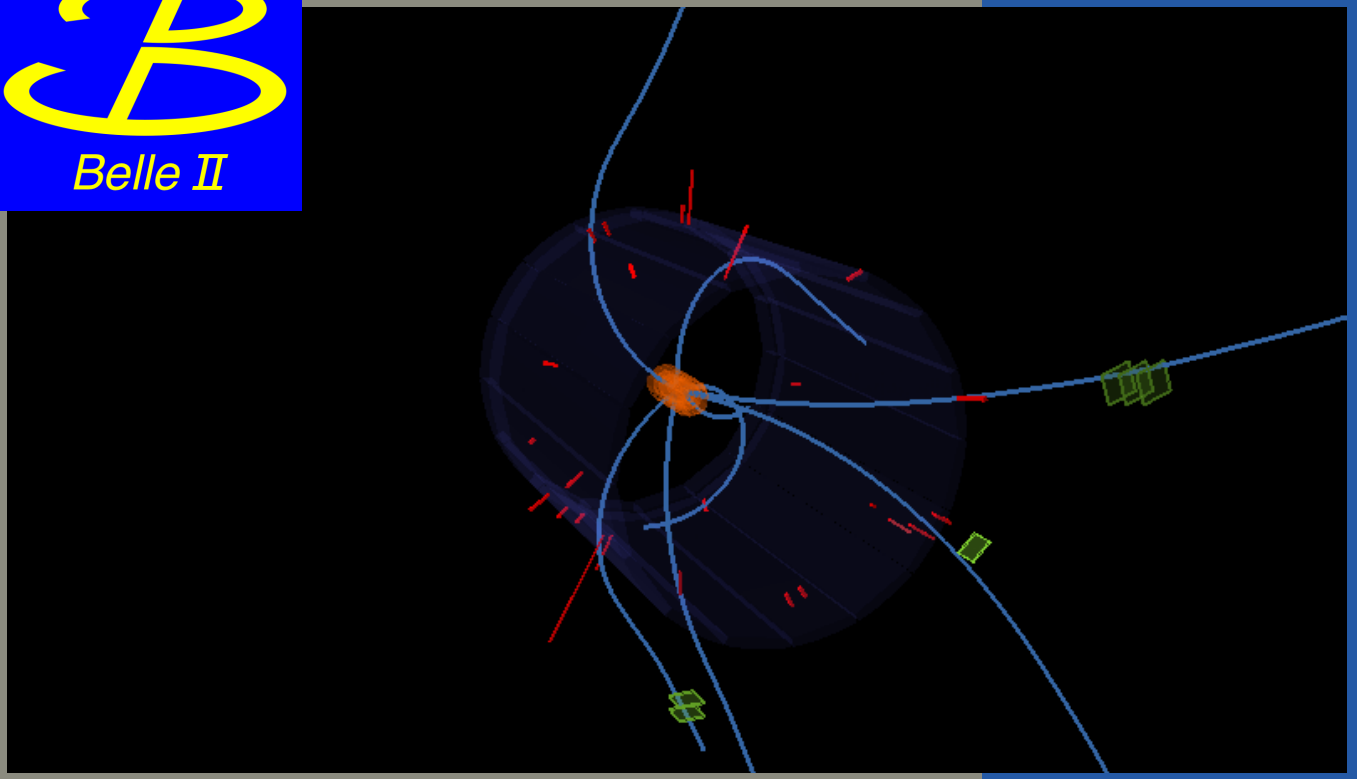

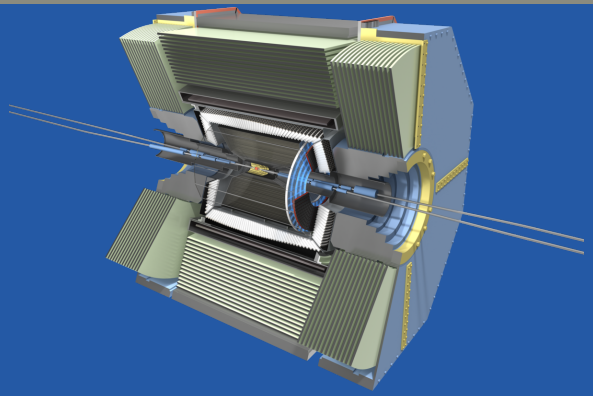

Ereignis 32

$\not{E} = 1.4$

$\nwarrow\!\!\searrow = 0.1$

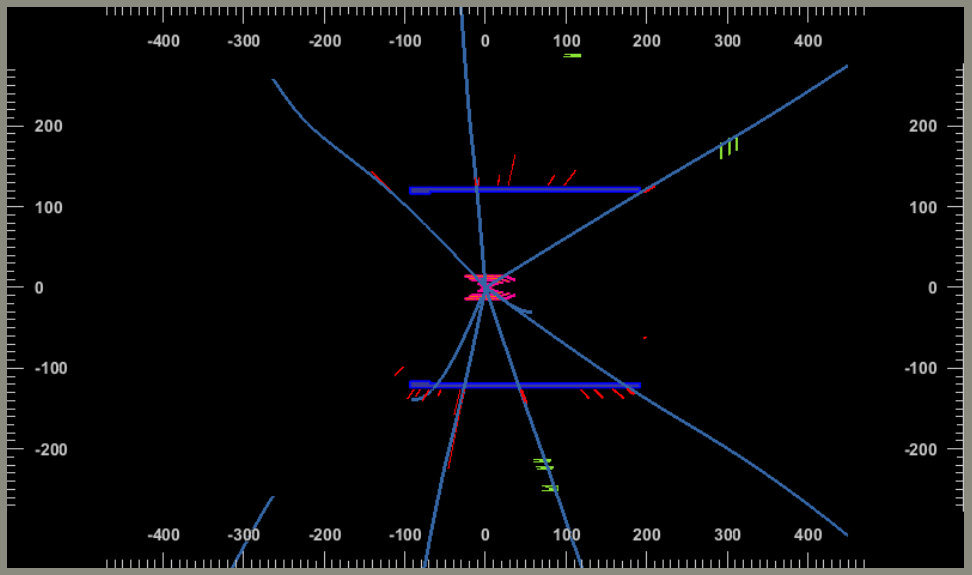

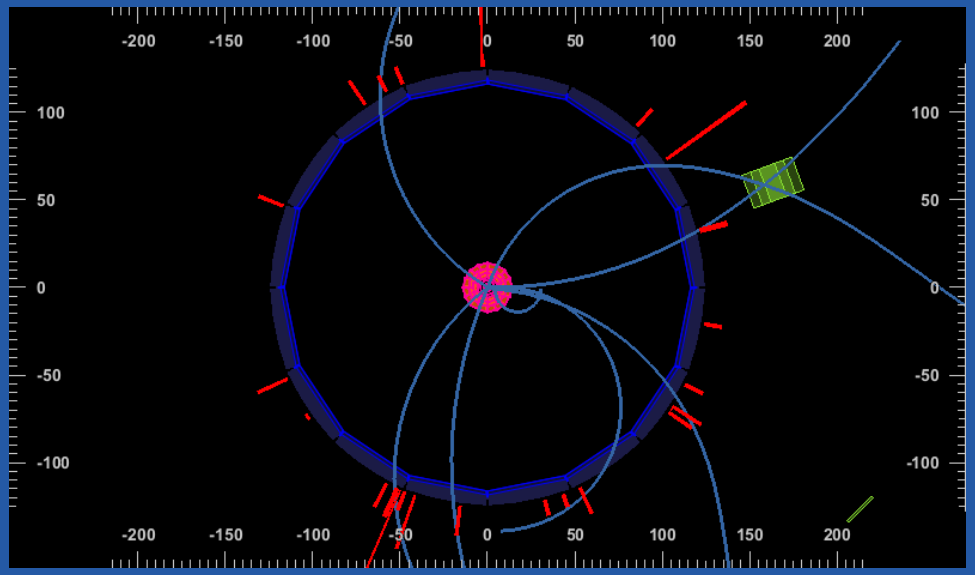

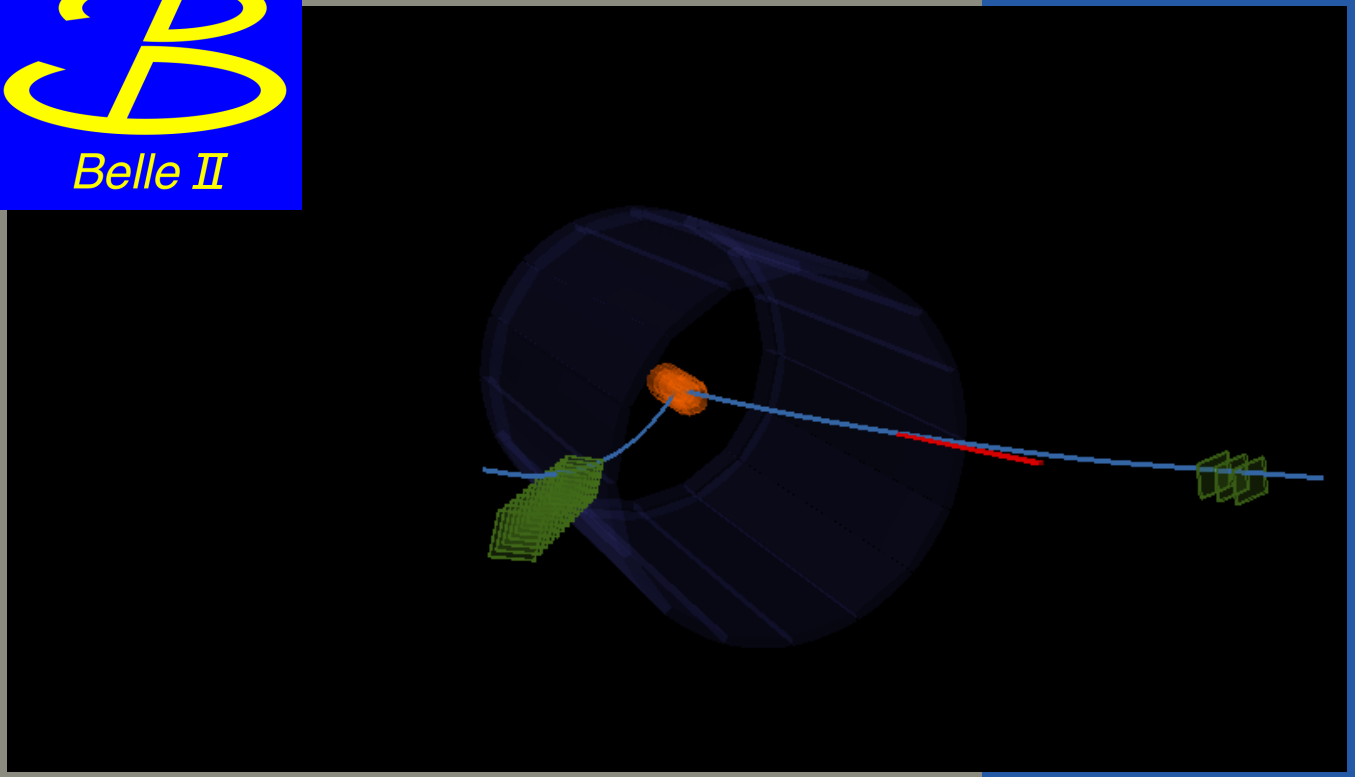

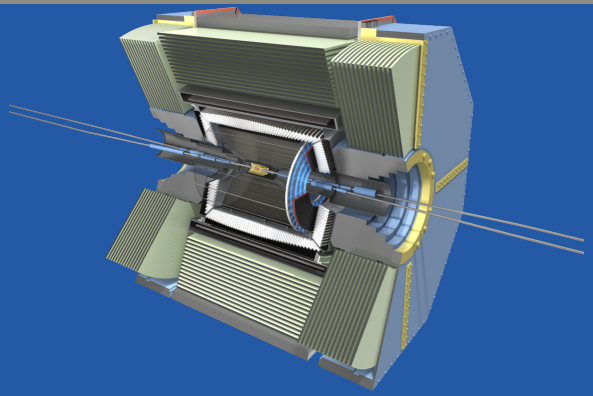

Ereignis 33

$\not{E} = -0.3$

$\nwarrow\!\!\searrow = 0.41$

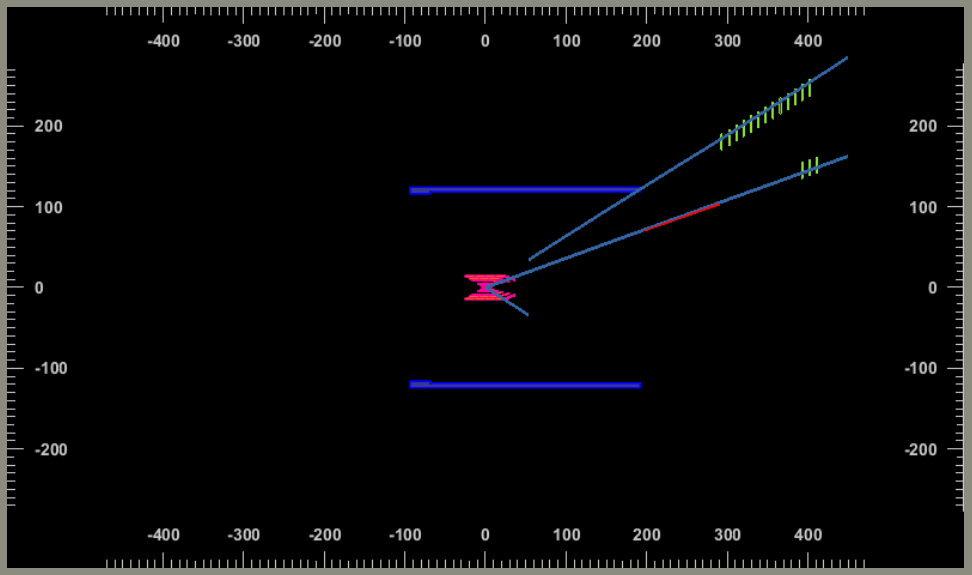

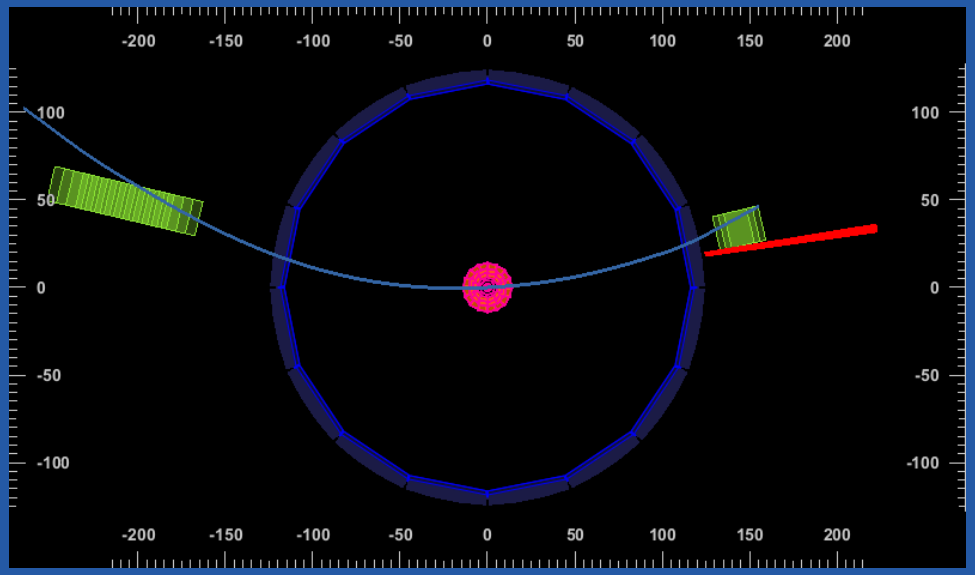

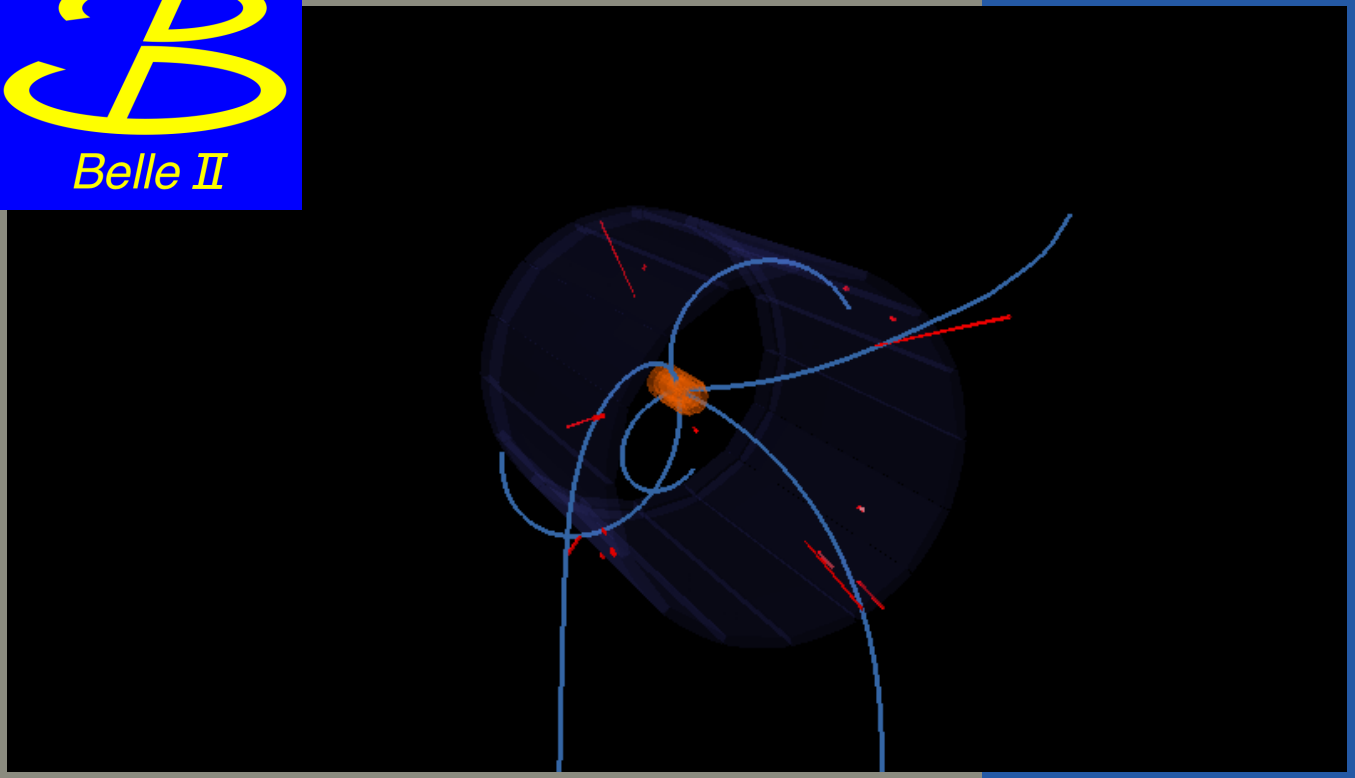

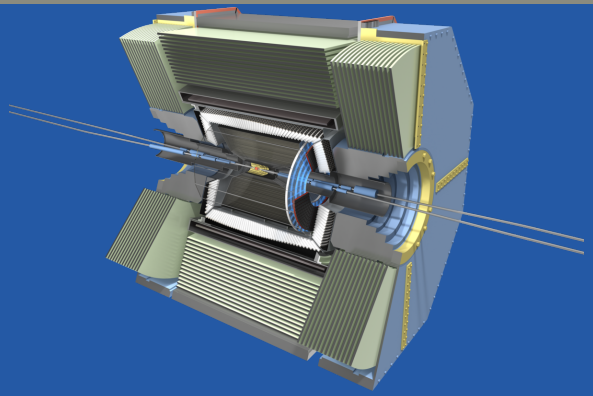

Ereignis 34

$\not{E} = 55.8$

$\nwarrow\!\!\searrow = 0.22$

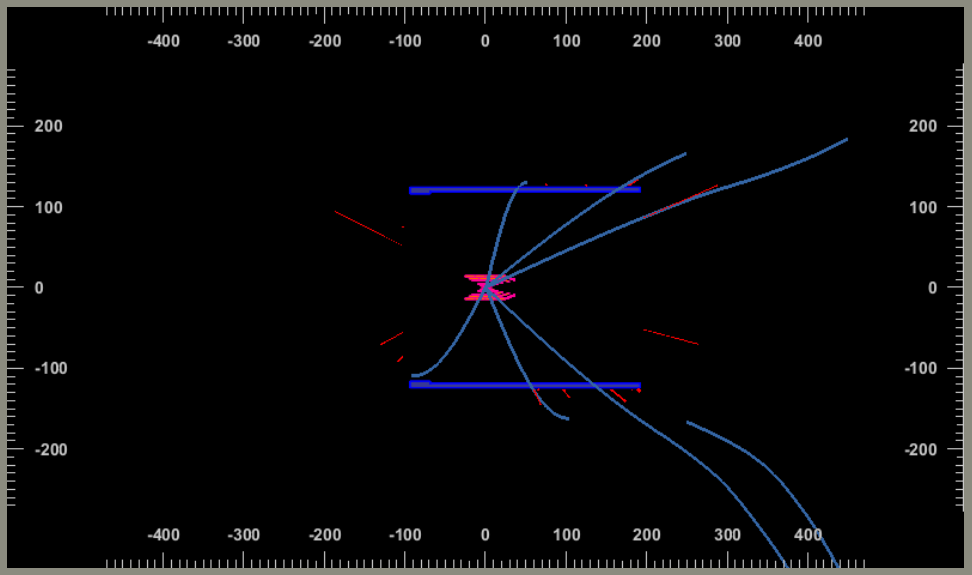

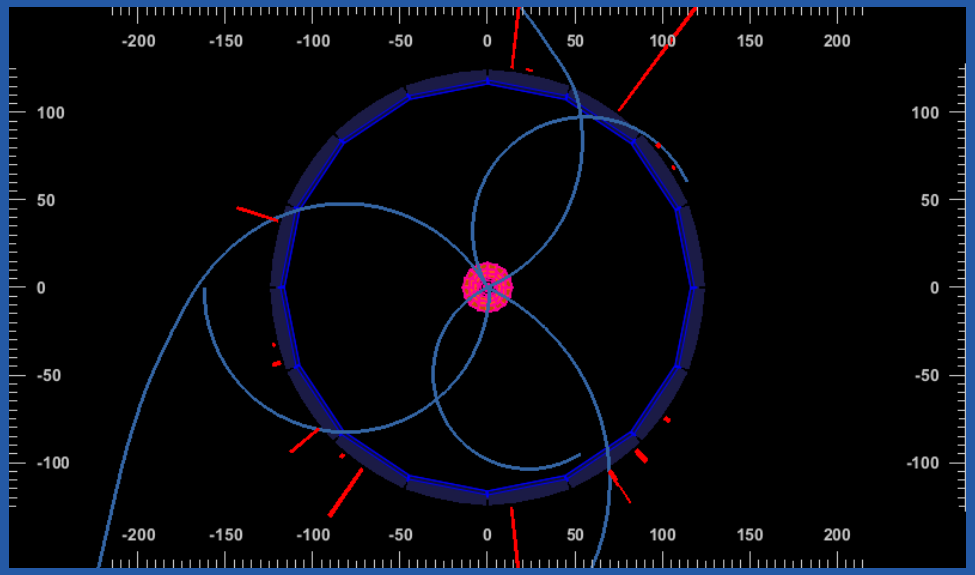

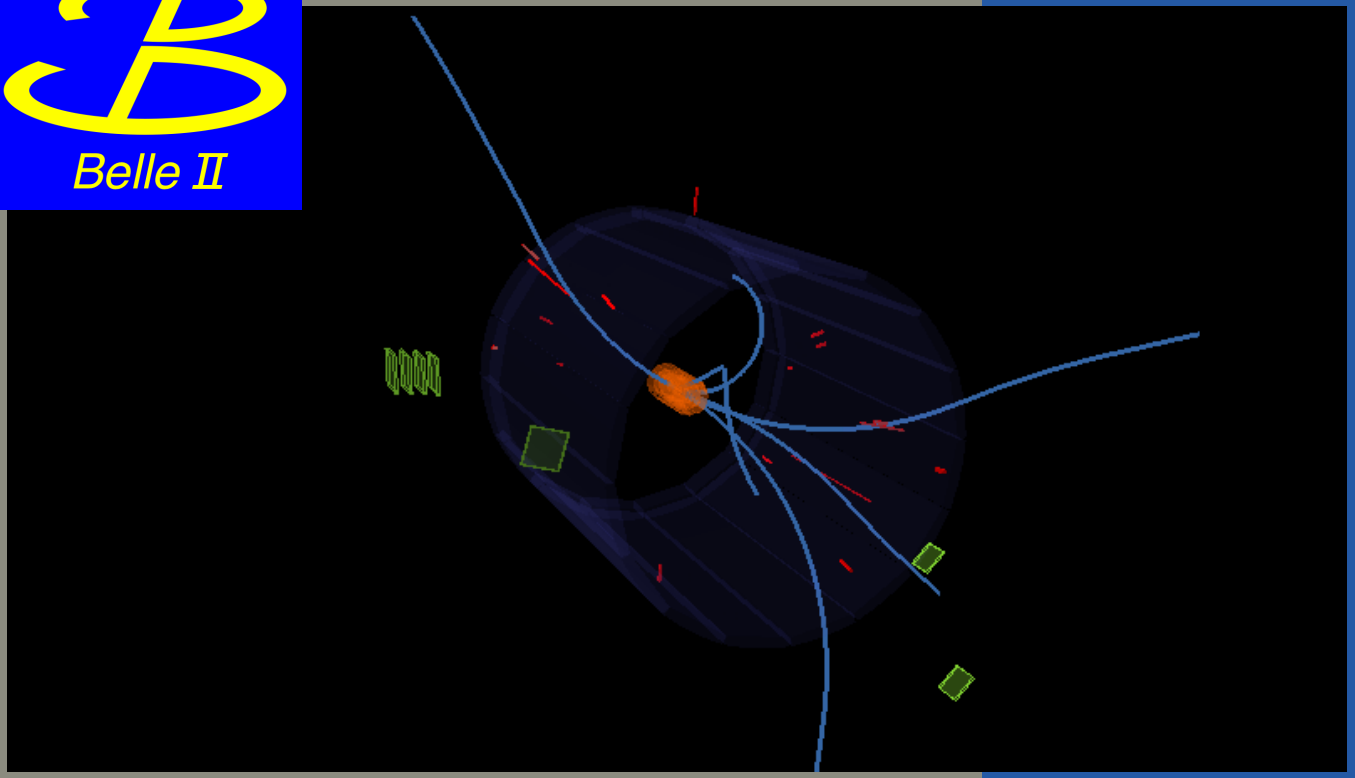

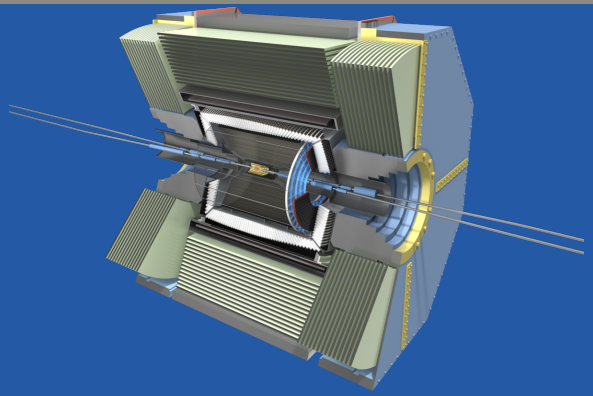

Ereignis 35

$\not{E} = 0.5$

$\nwarrow\!\!\searrow = 0.41$

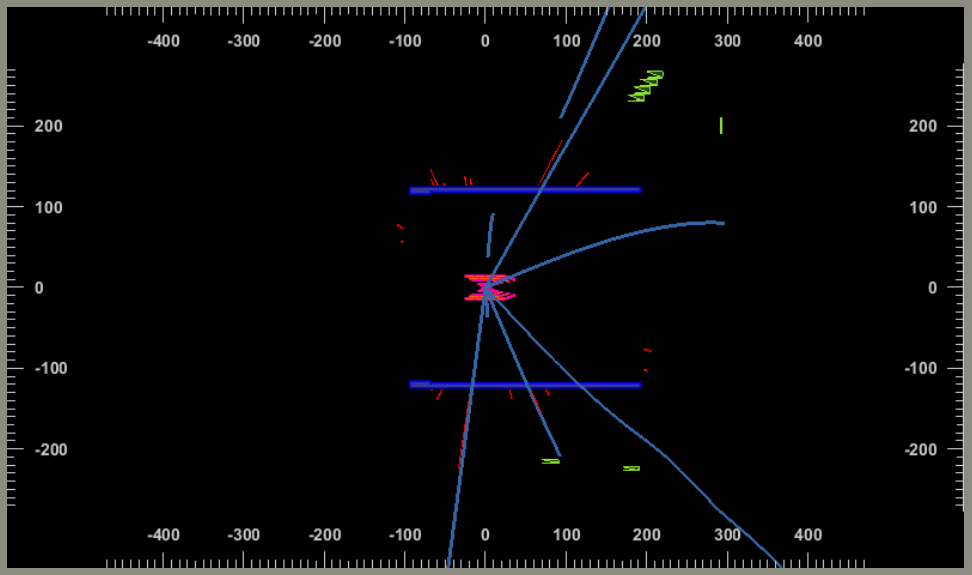

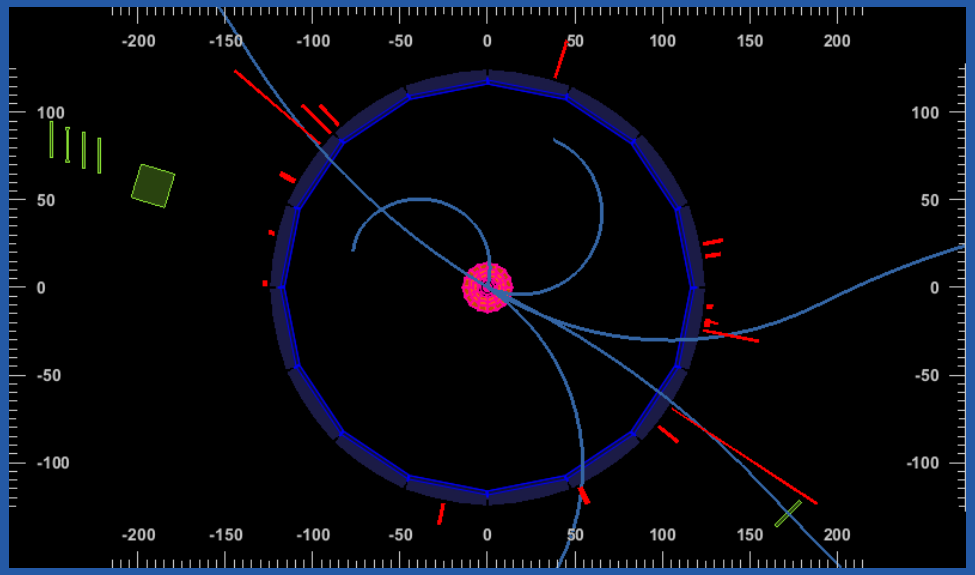

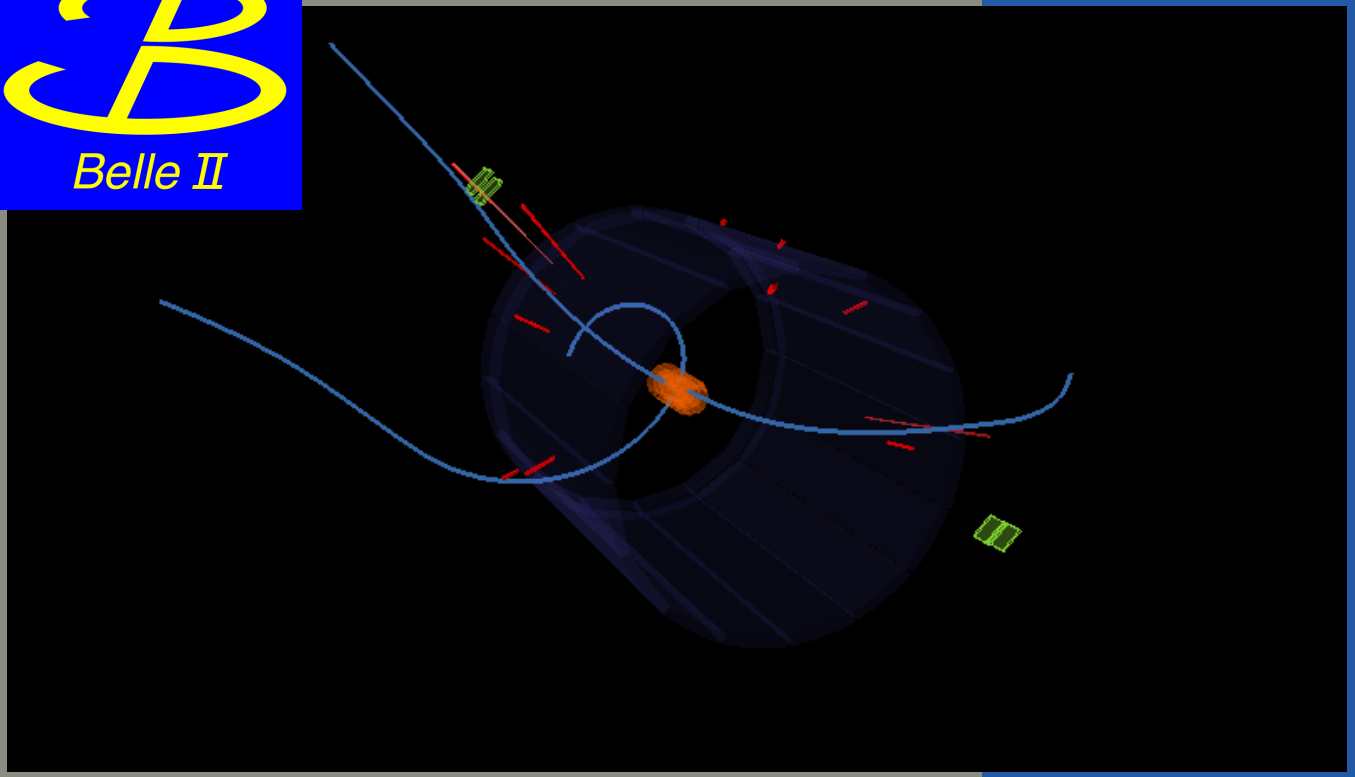

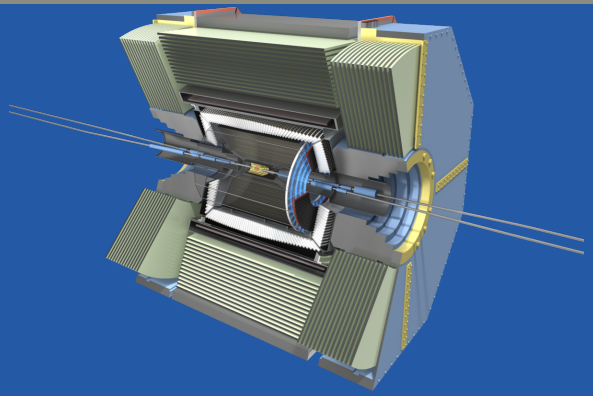

Ereignis 36

$\not{E} = 9.5$

$\nwarrow\!\!\searrow = 0.38$

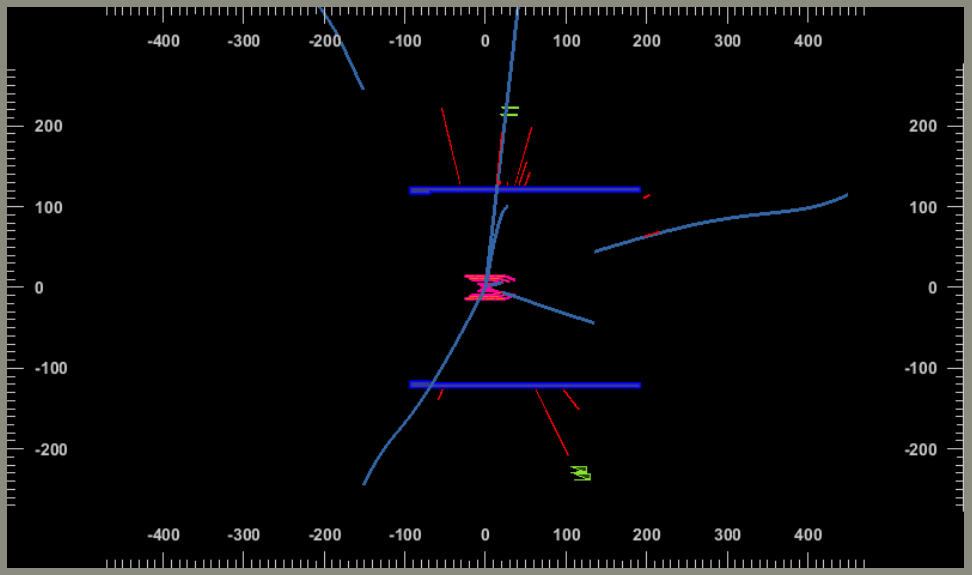

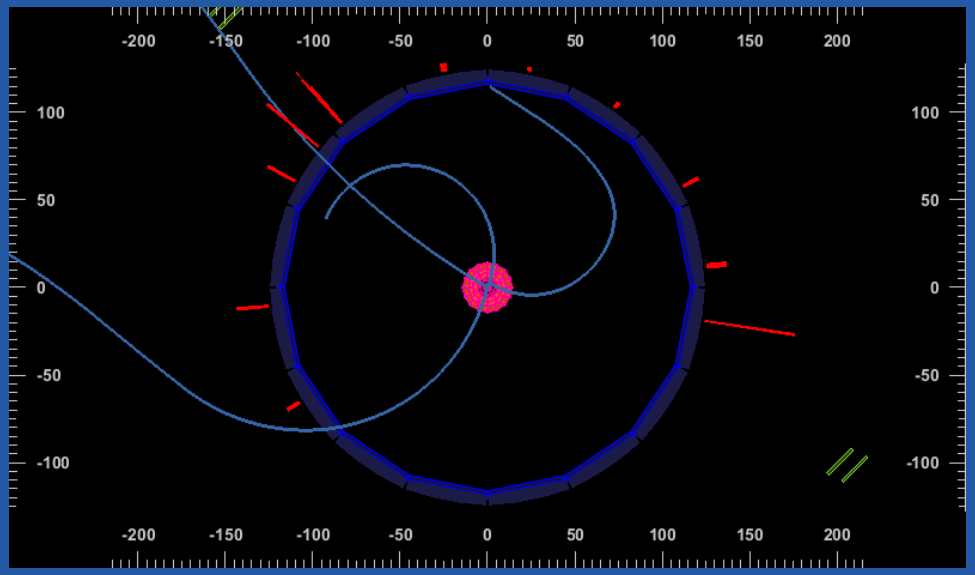

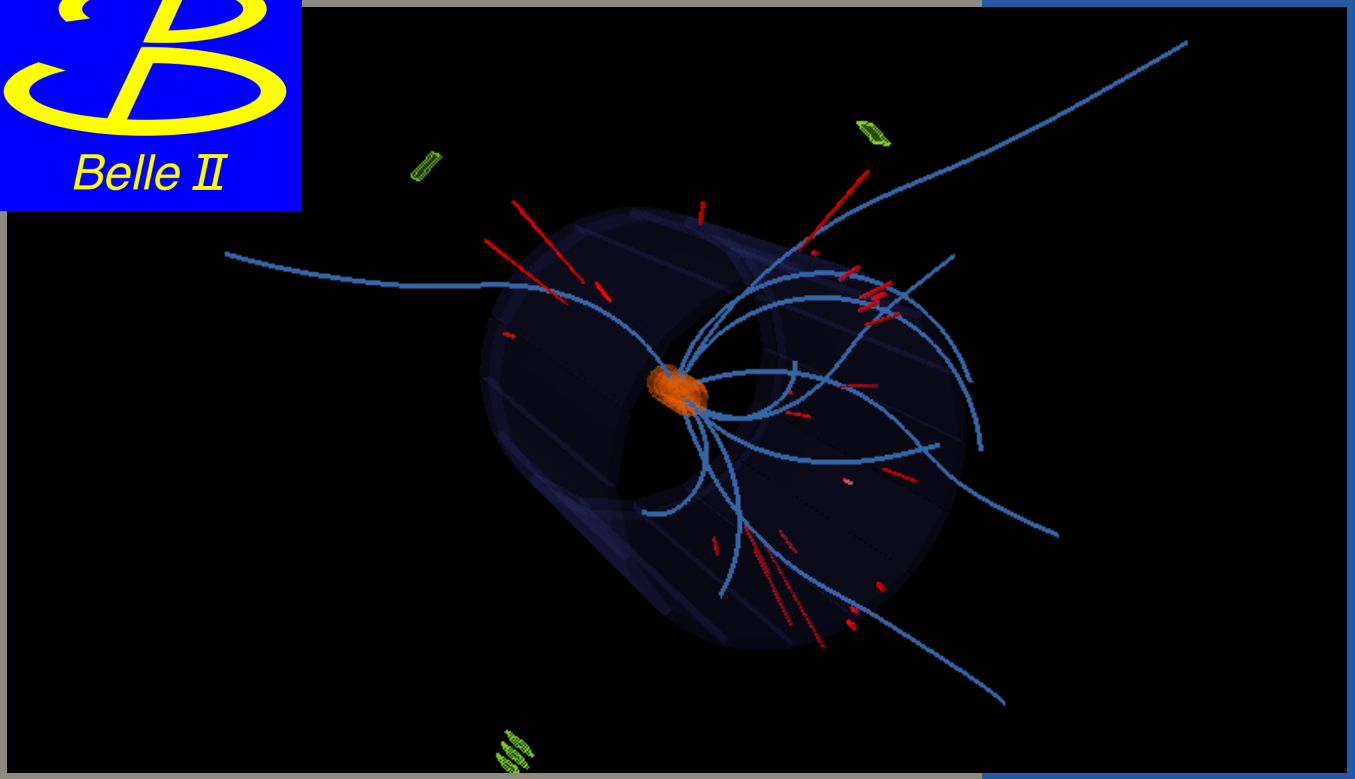

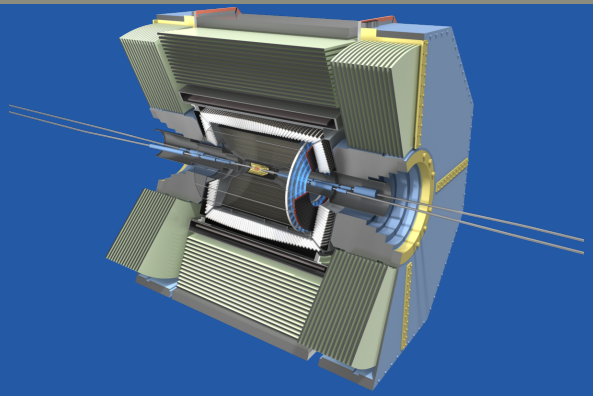

Ereignis 37

$\not{E} = 3.4$

$\nwarrow\!\!\searrow = 0.25$

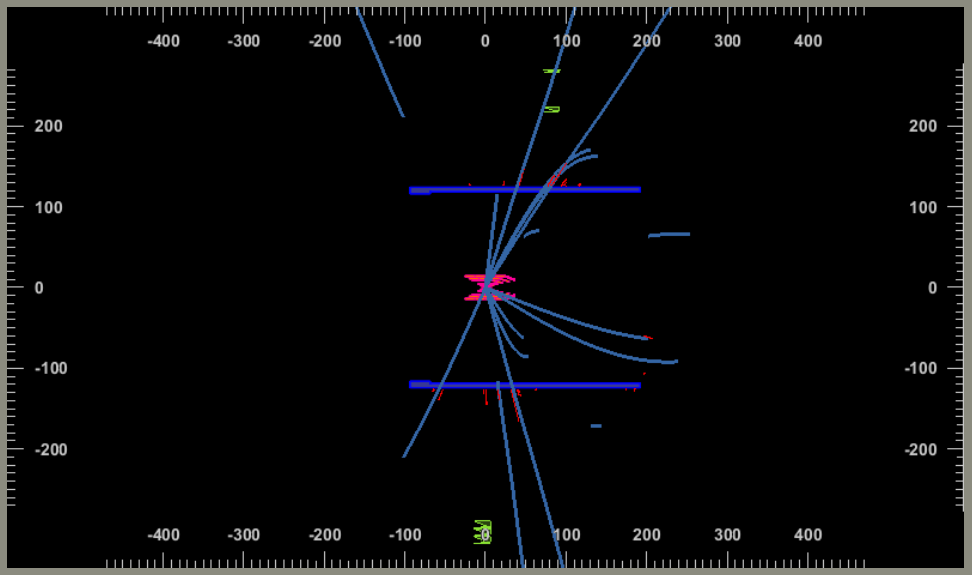

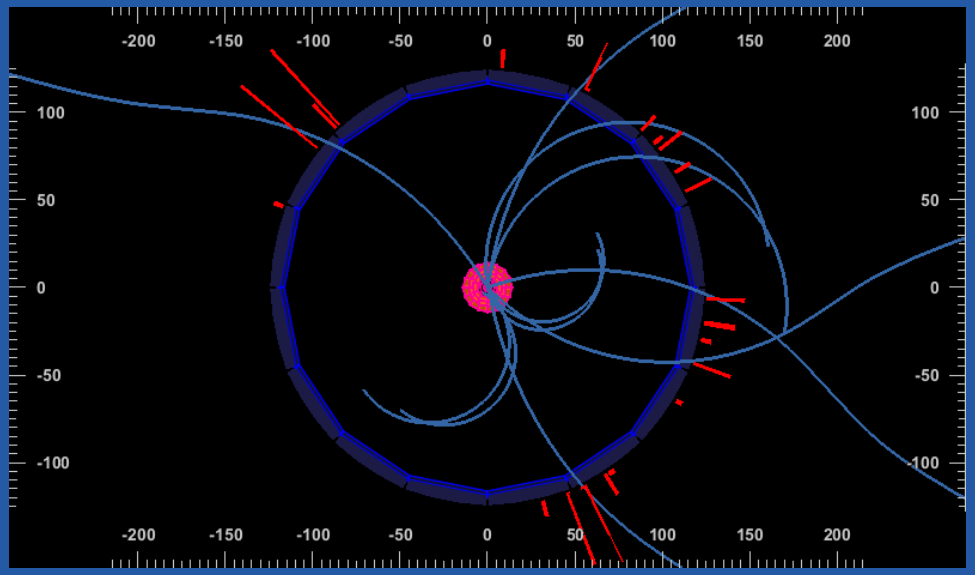

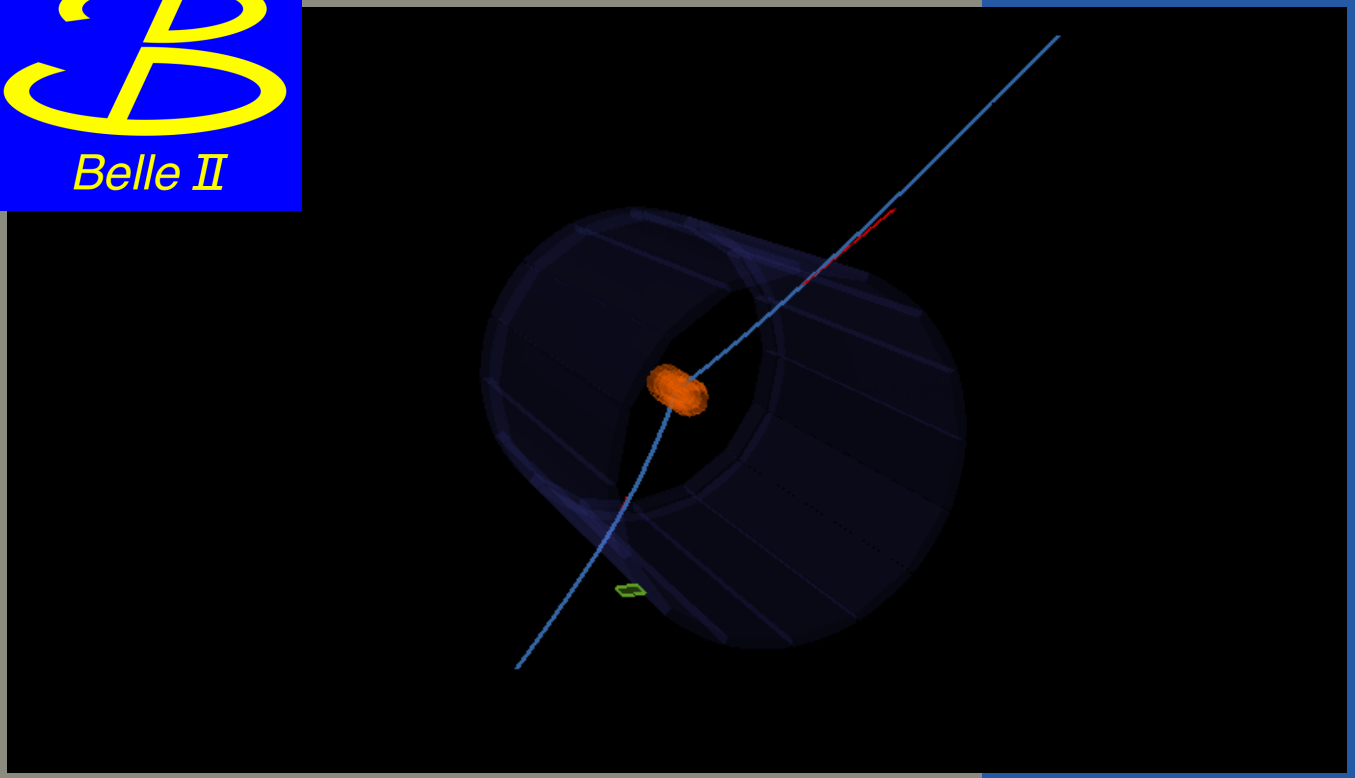

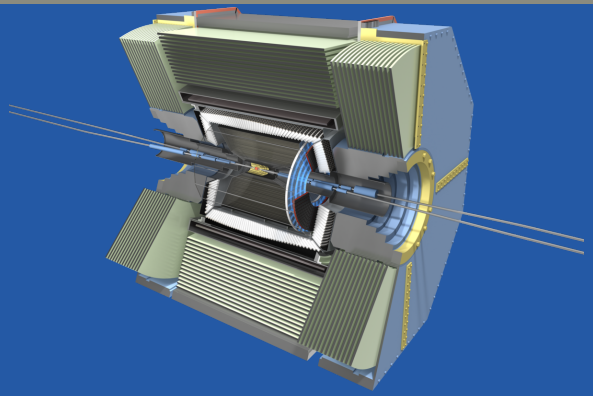

Ereignis 38

$\not{E} = -0.0$

$\nwarrow\!\!\searrow = 1.0$

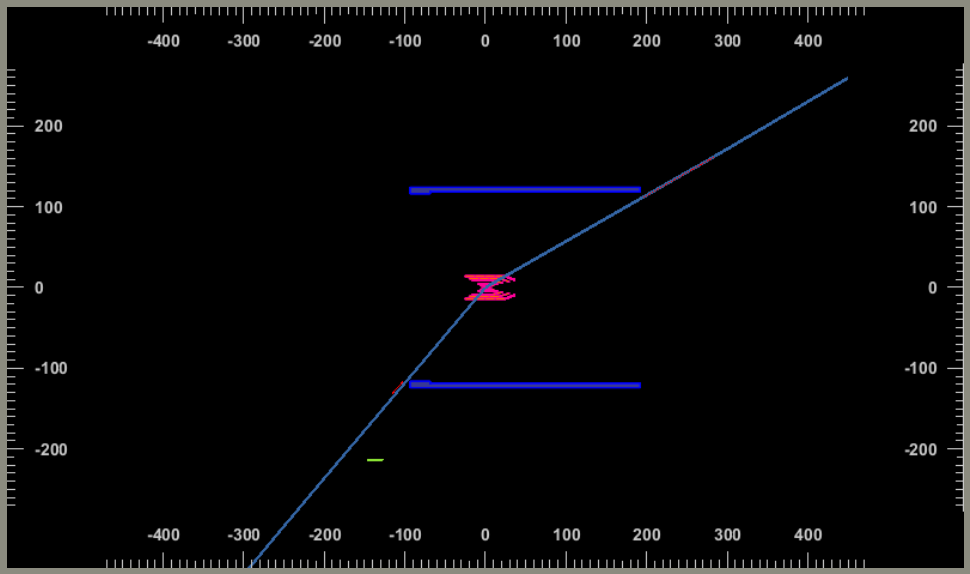

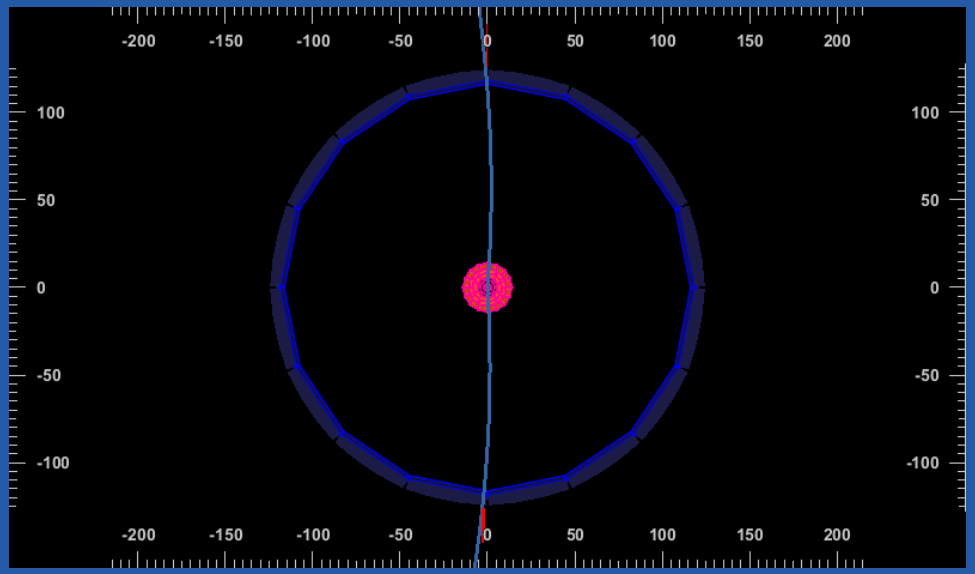

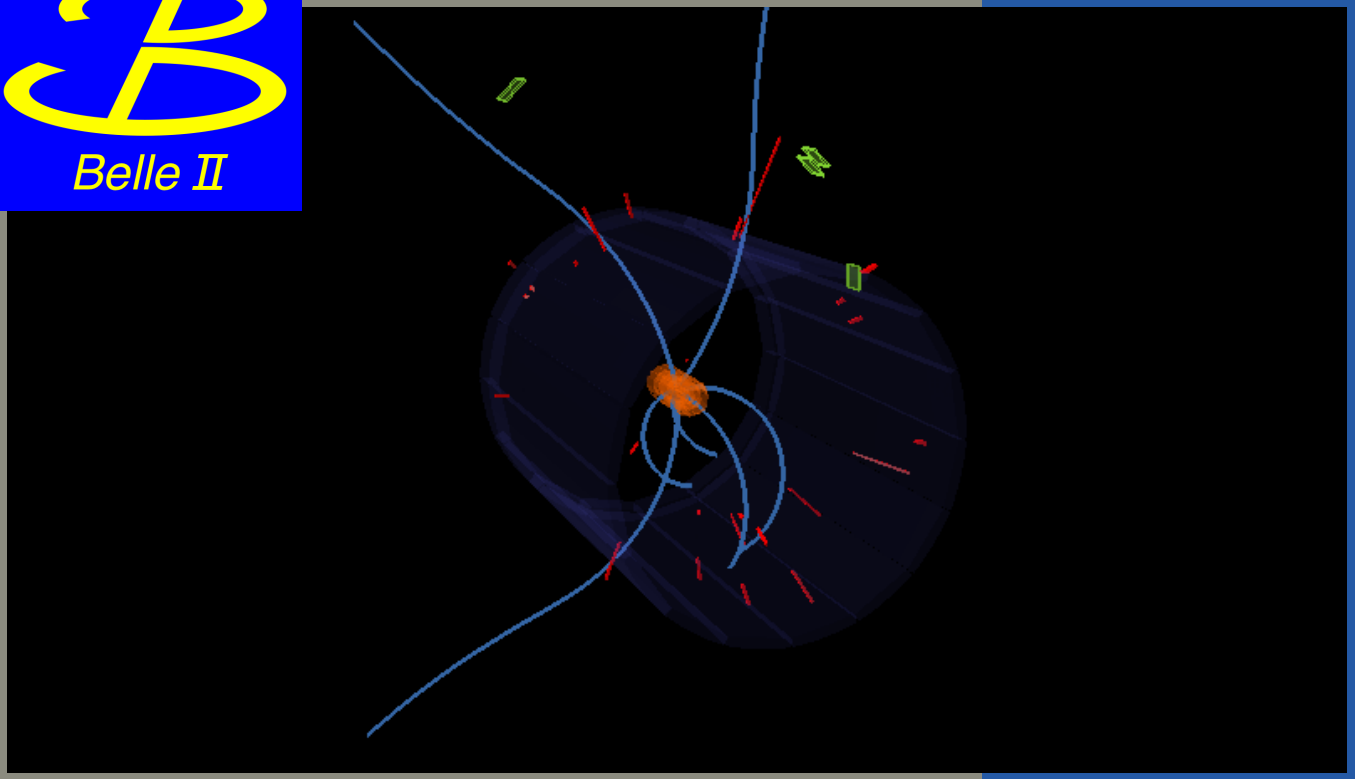

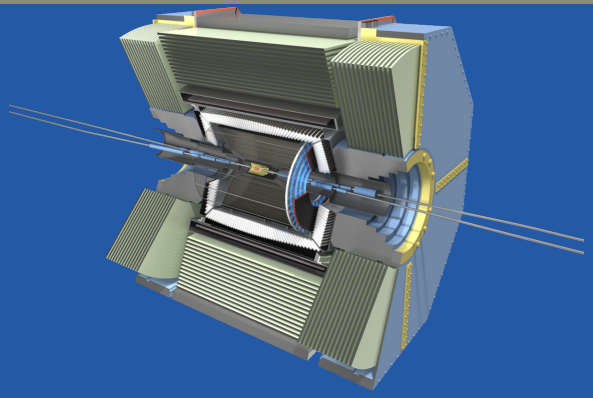

Ereignis 39

$\not{E} = 8.2$

$\nwarrow\!\!\searrow = 0.1$

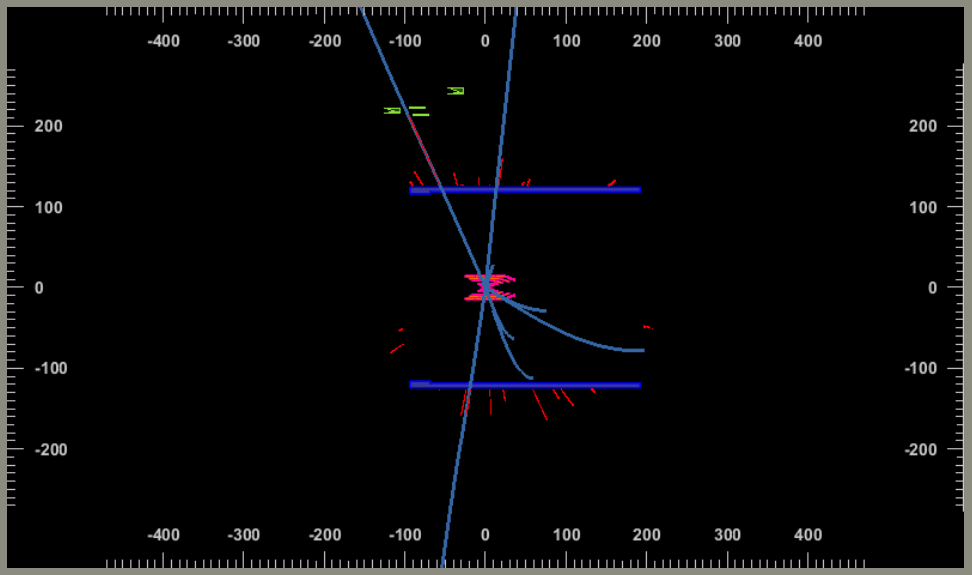

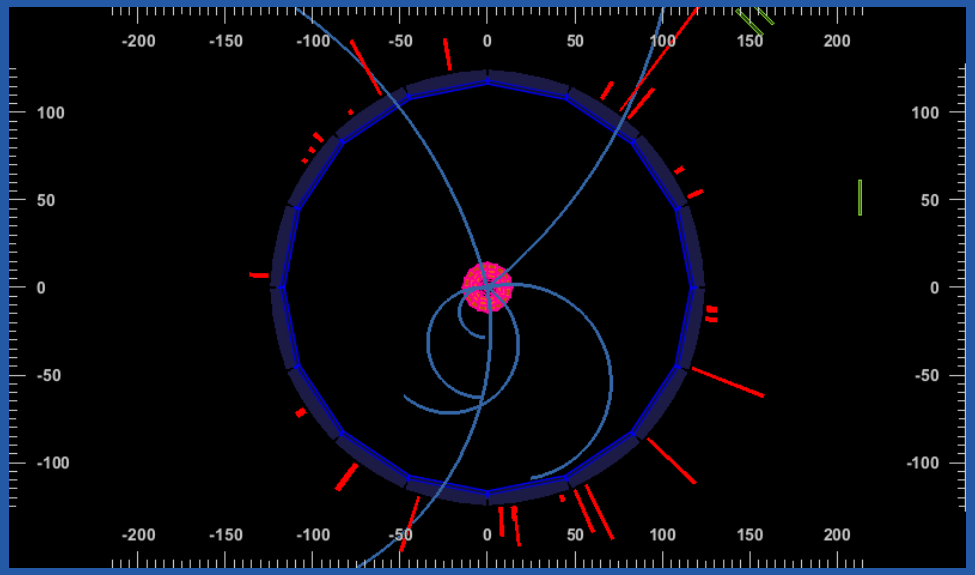

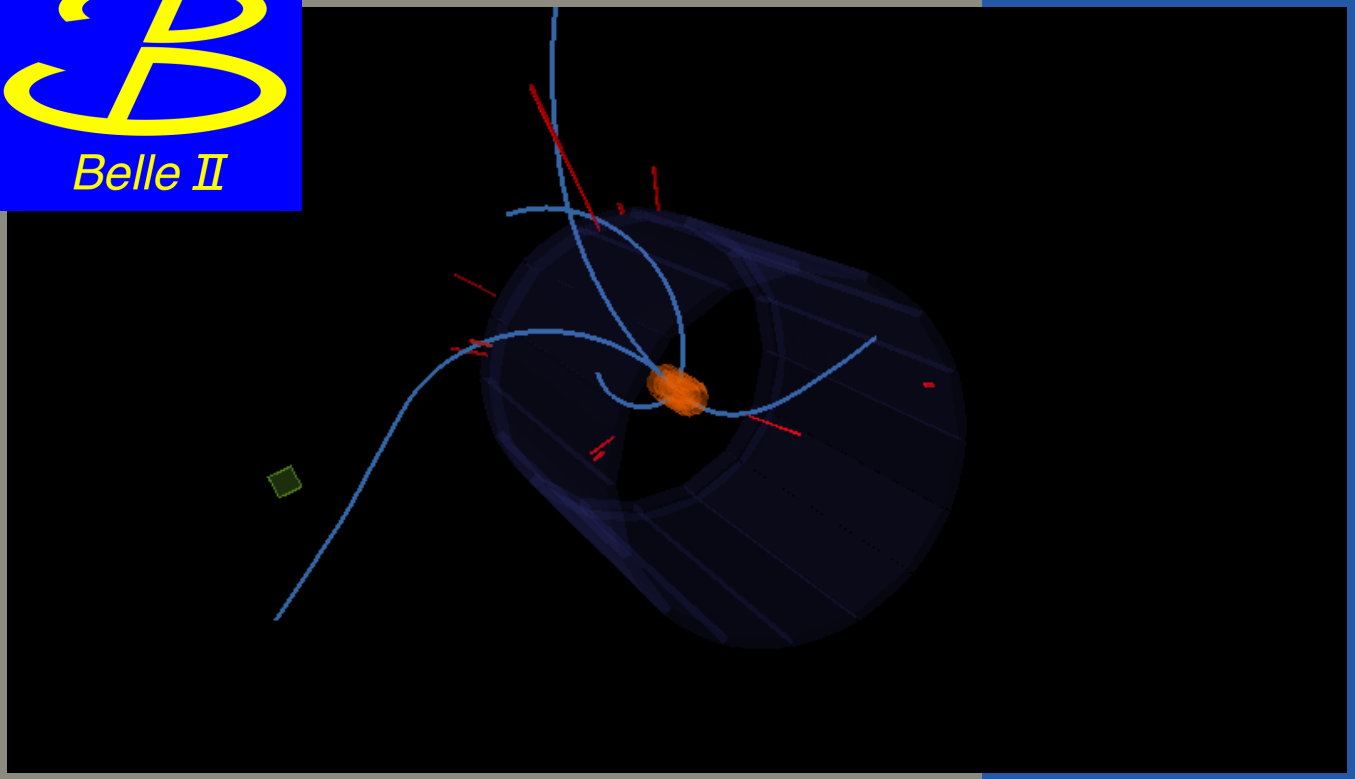

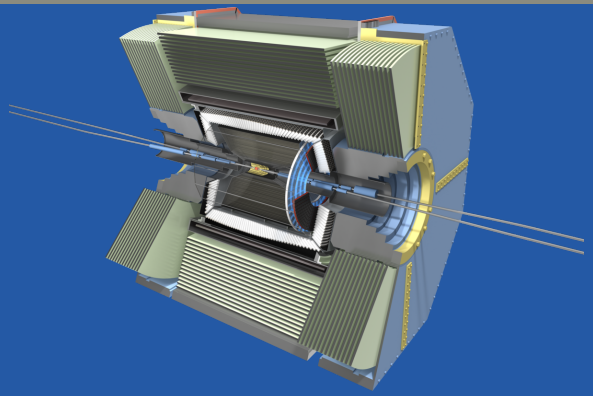

Ereignis 40

$\not{E} = 7.0$

$\nwarrow\!\!\searrow = 0.23$

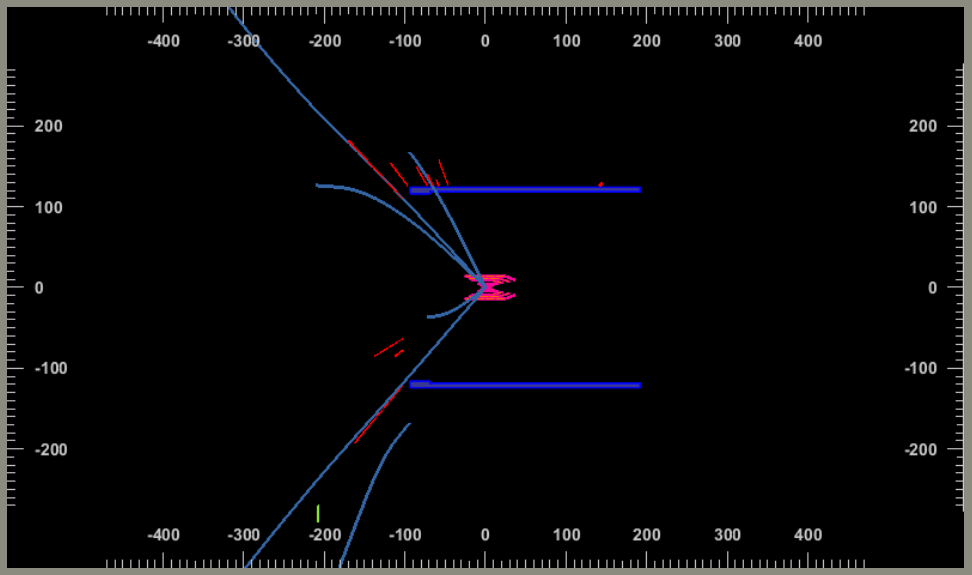

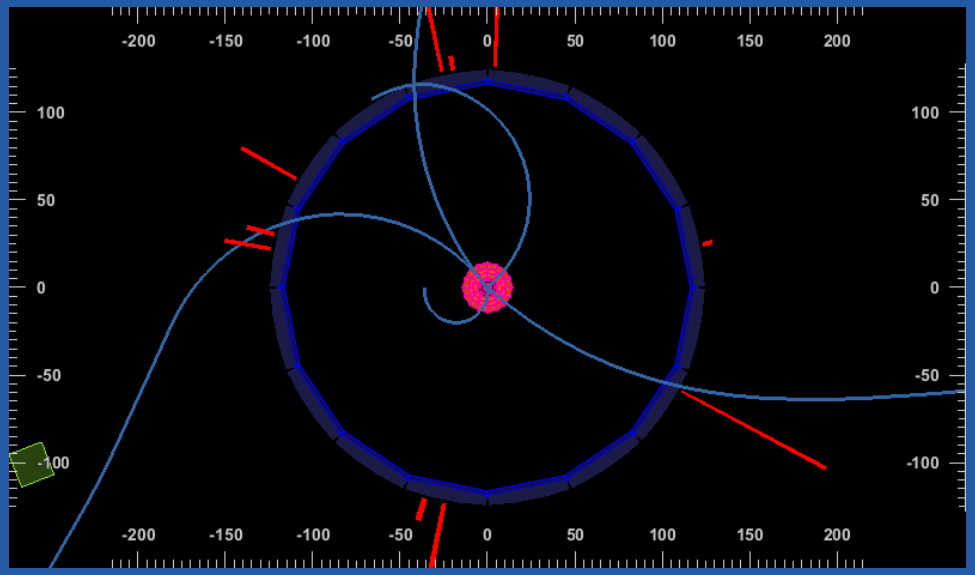

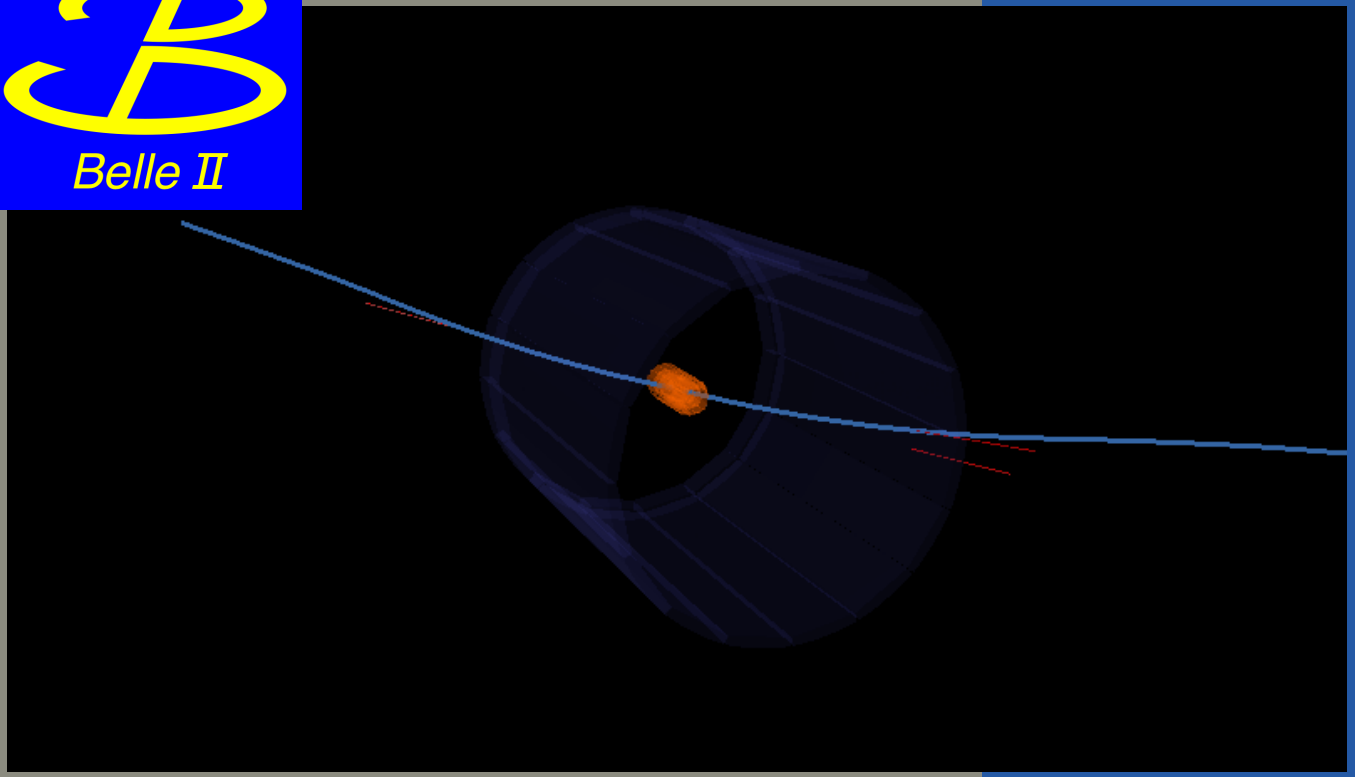

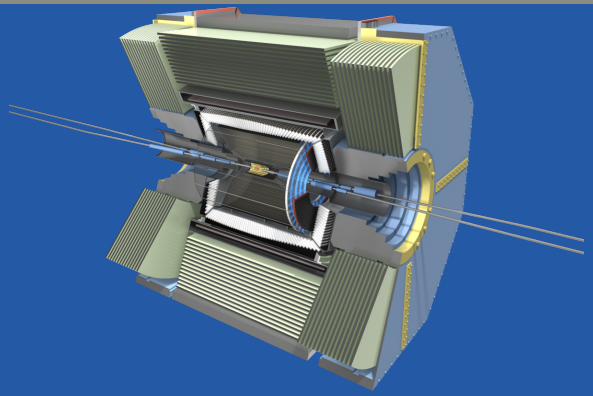

Ereignis 41

$\not{E} = -0.0$

$\nwarrow\!\!\searrow = 1.0$

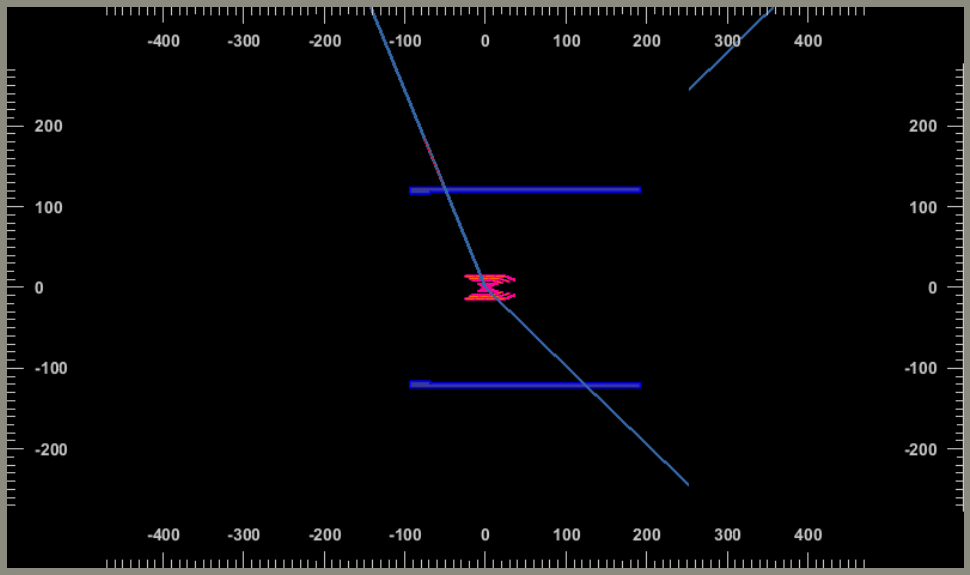

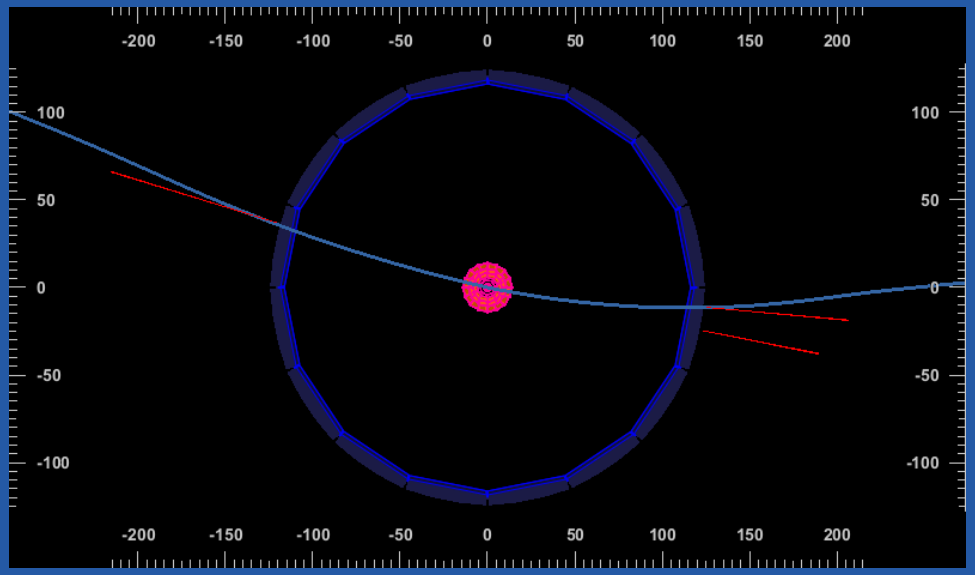

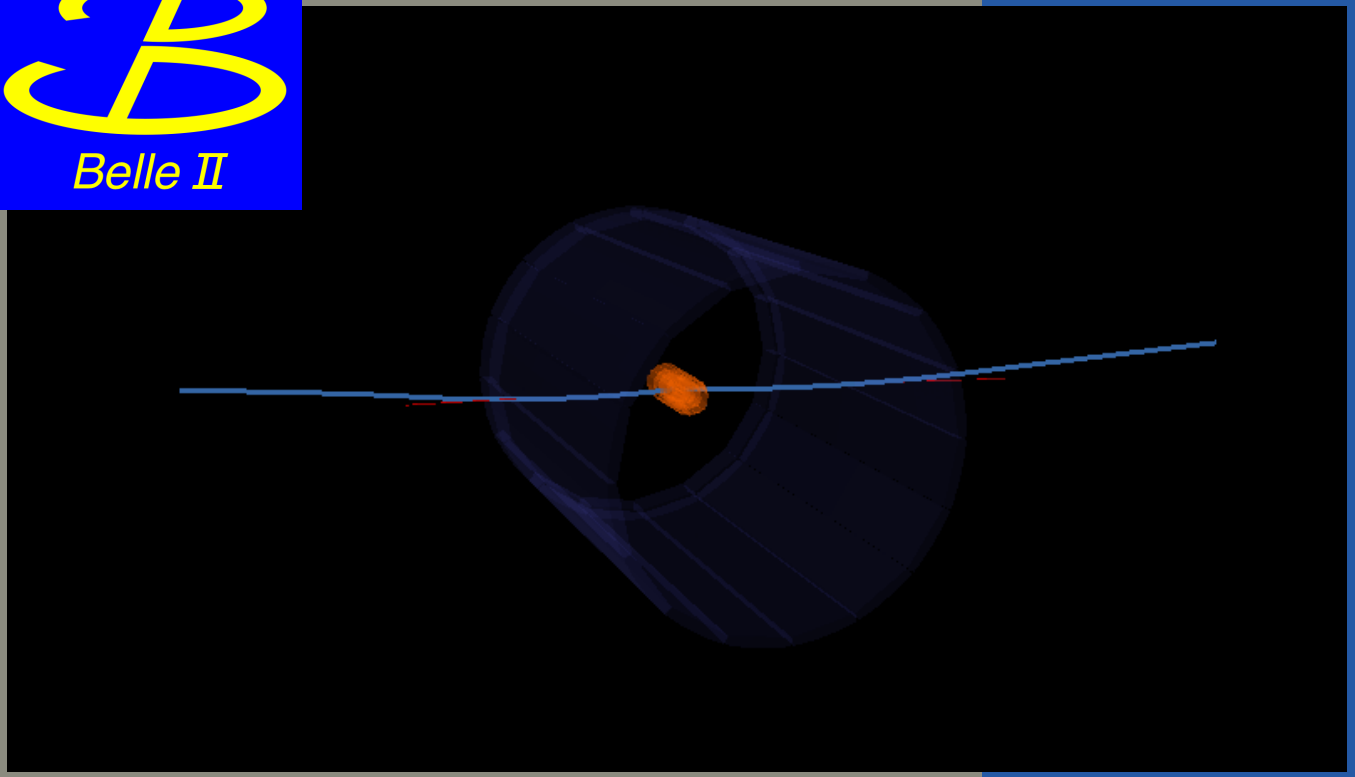

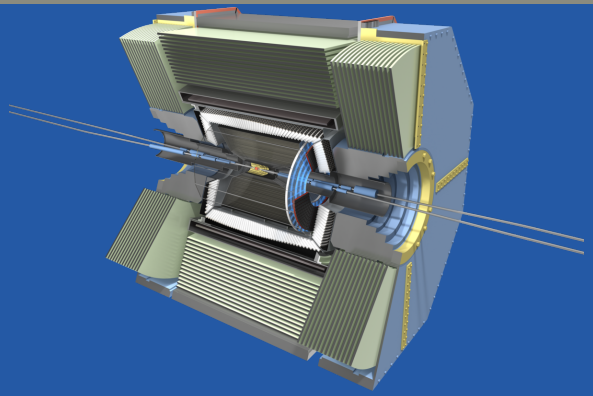

Ereignis 42

$\not{E} = 0.0$

$\nwarrow\!\!\searrow = 1.0$

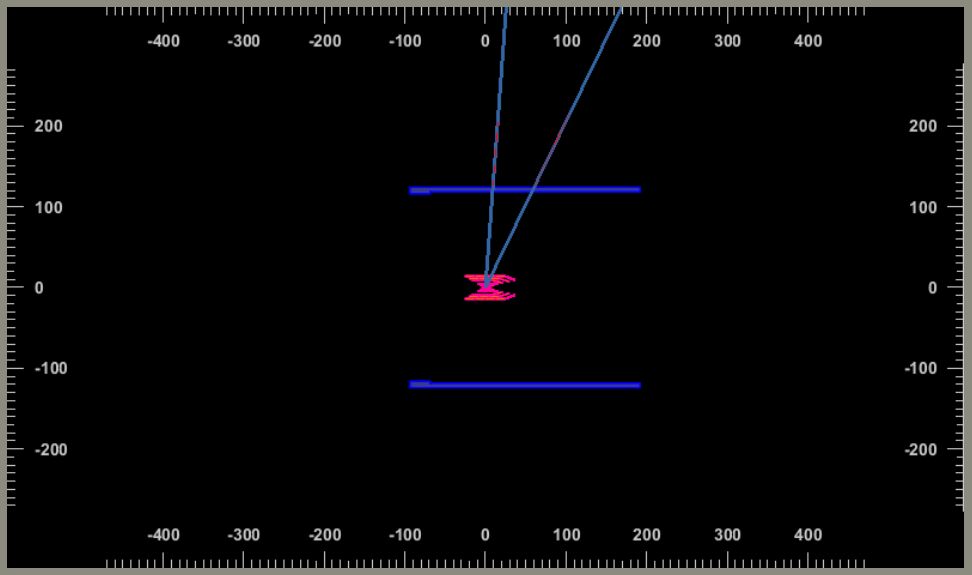

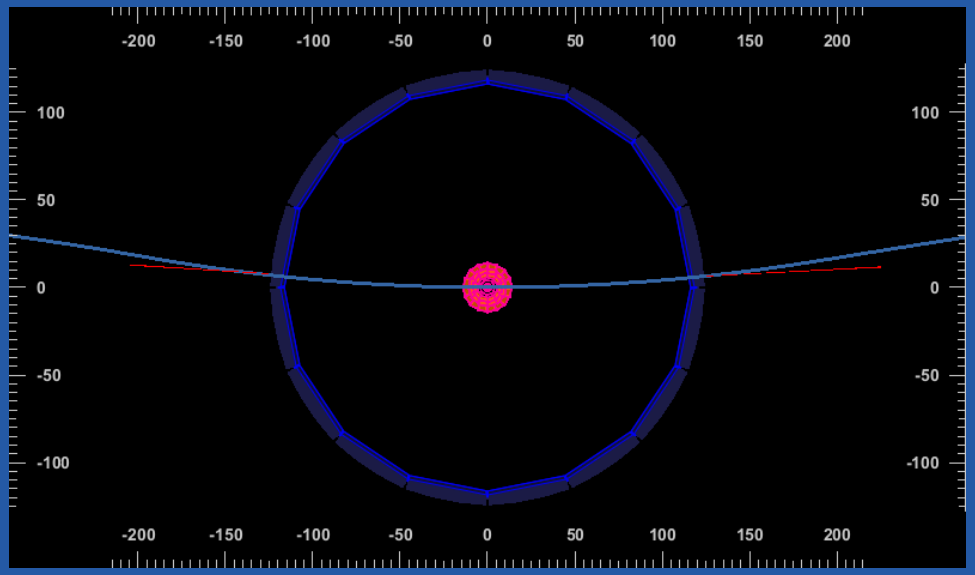

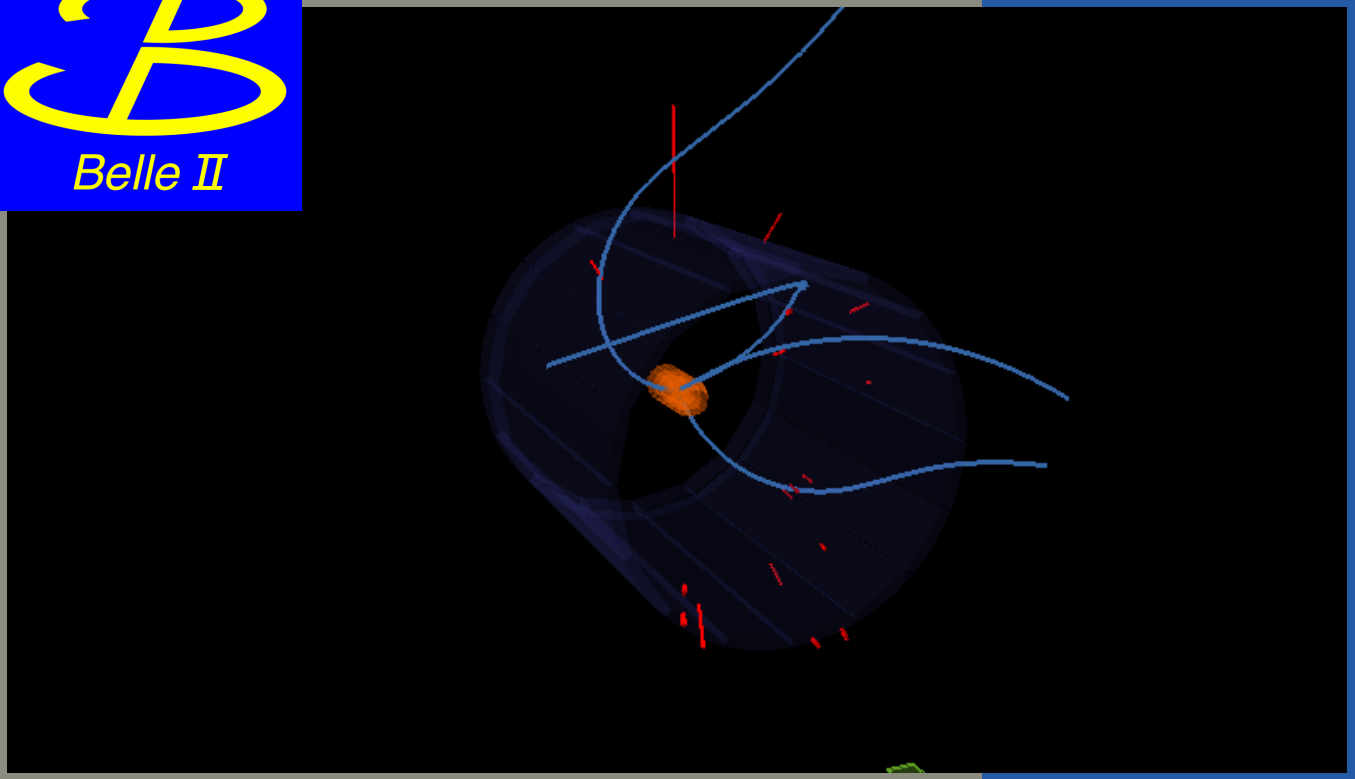

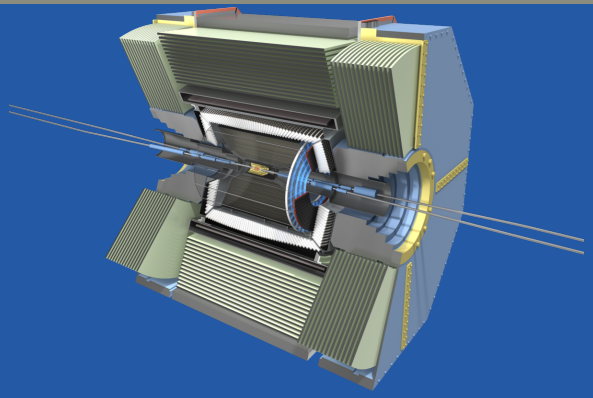

Ereignis 43

$\not{E} = 3.4$

$\nwarrow\!\!\searrow = 0.17$

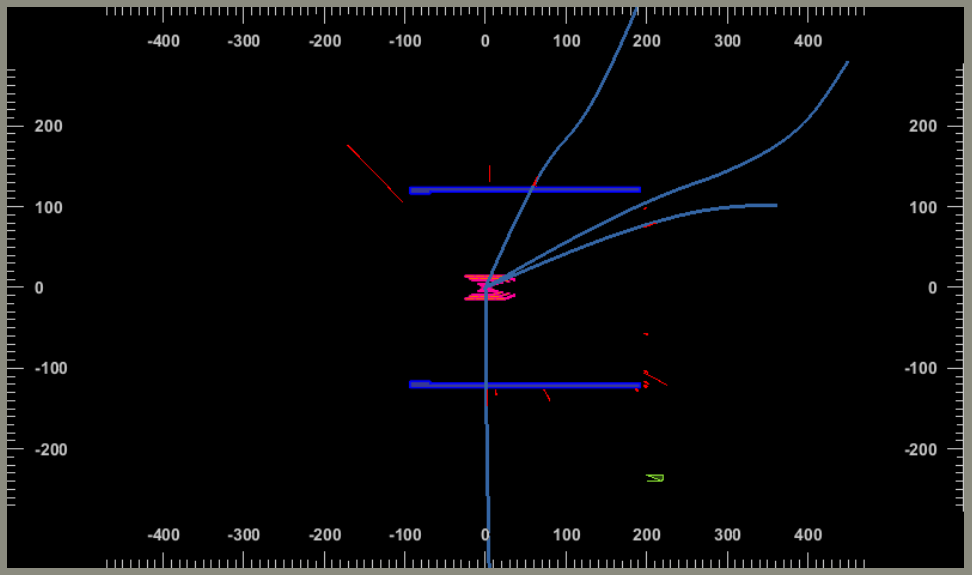

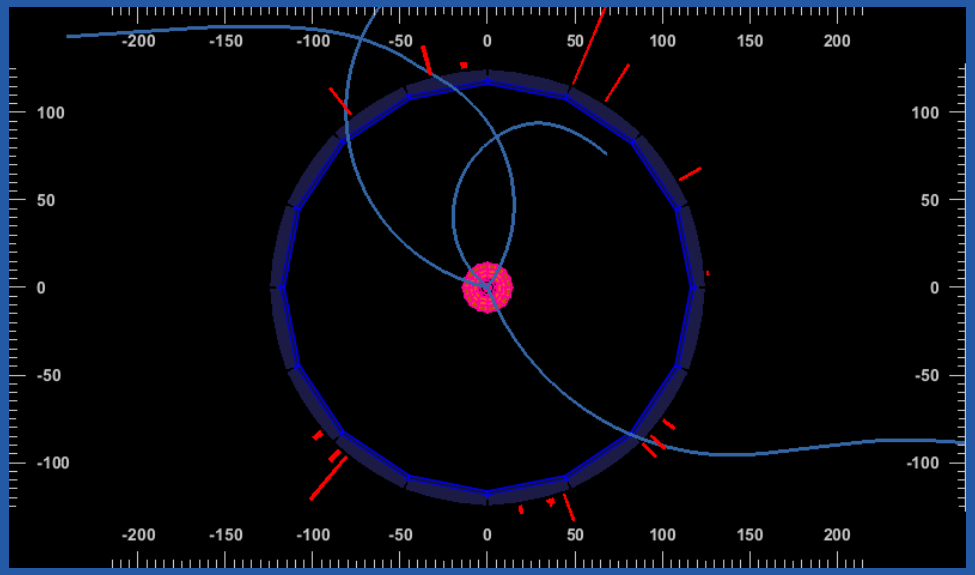

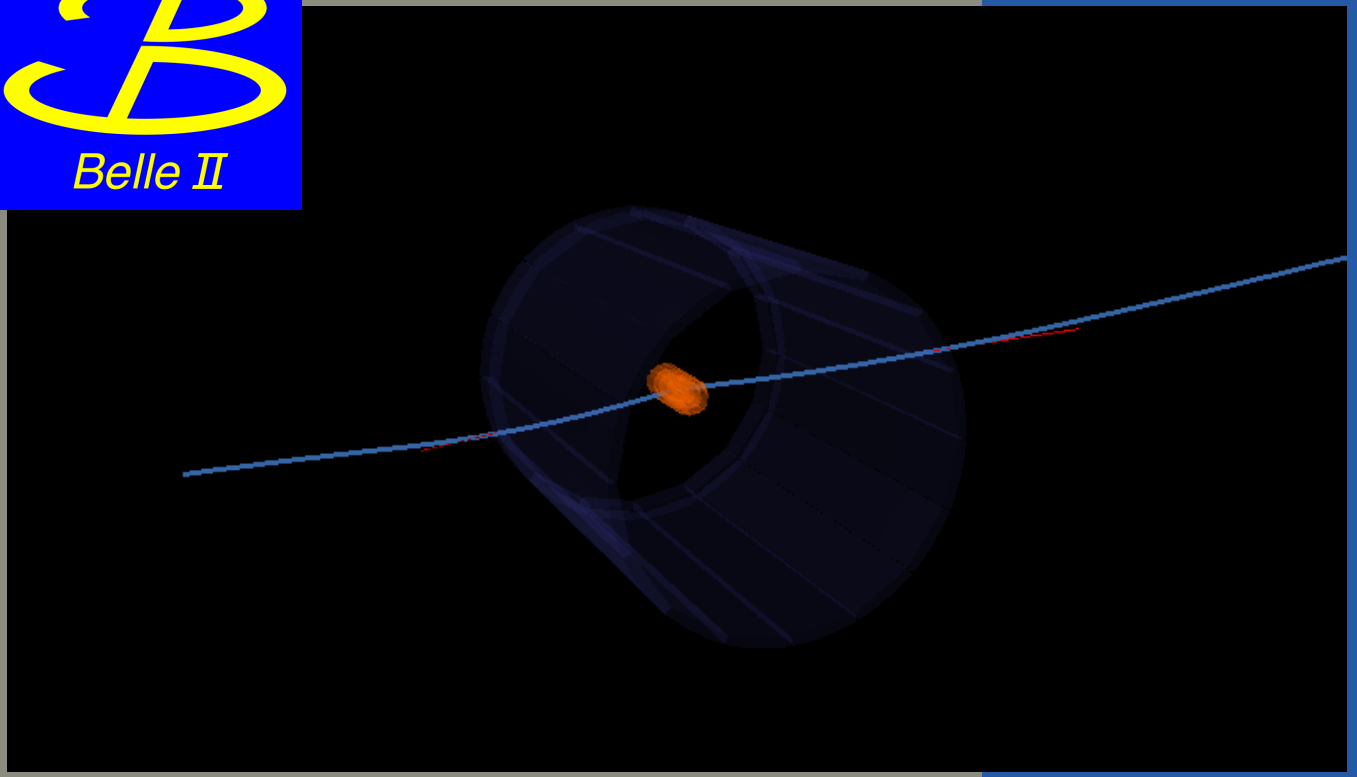

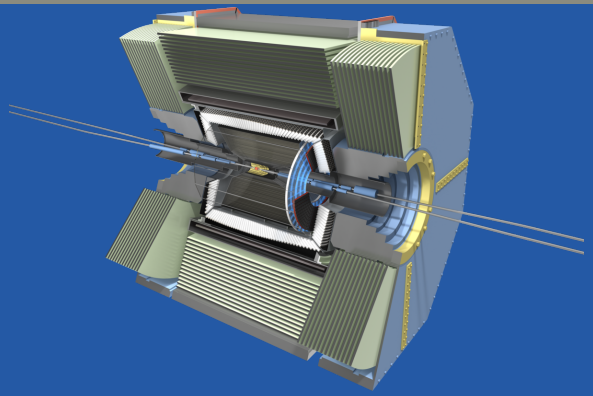

Ereignis 44

$\not{E} = 0.0$

$\nwarrow\!\!\searrow = 1.0$

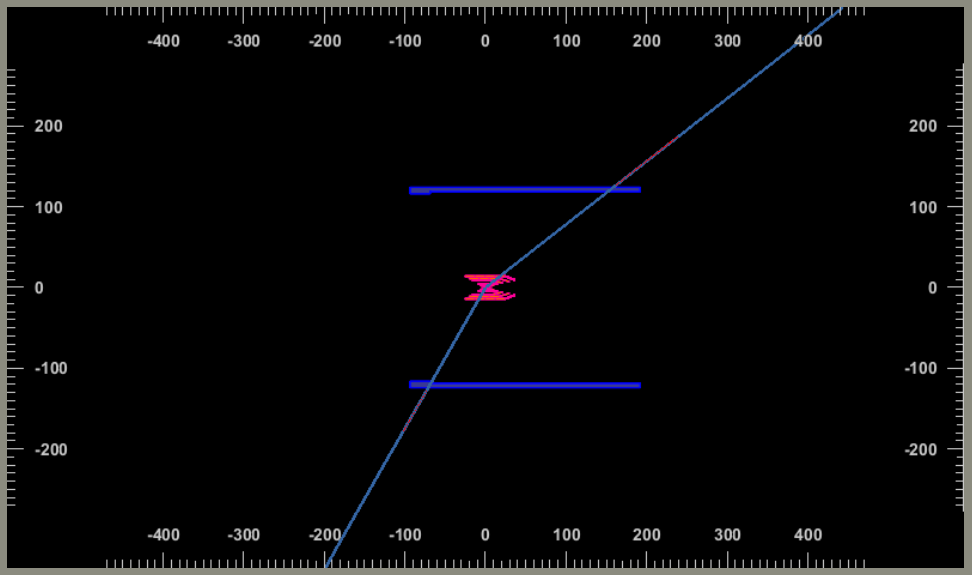

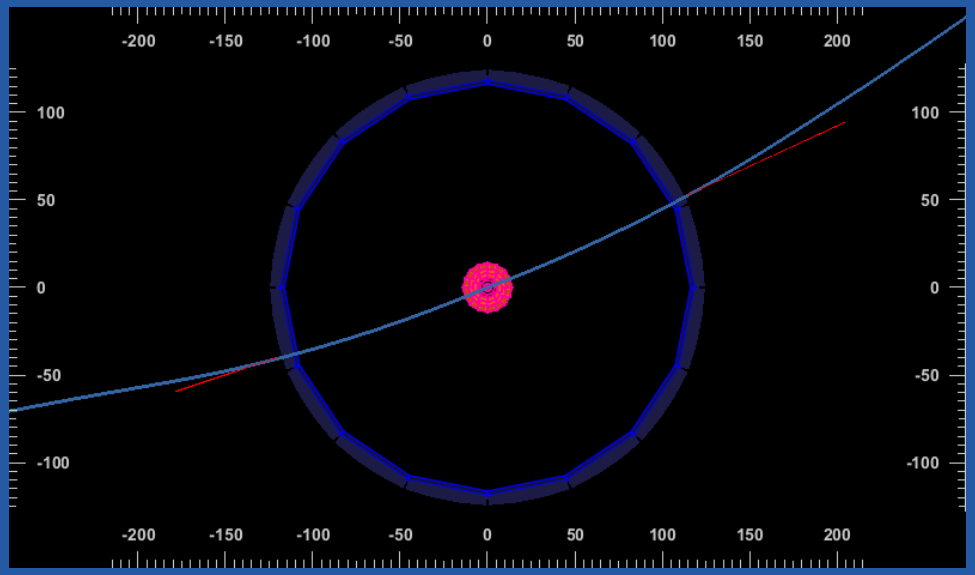

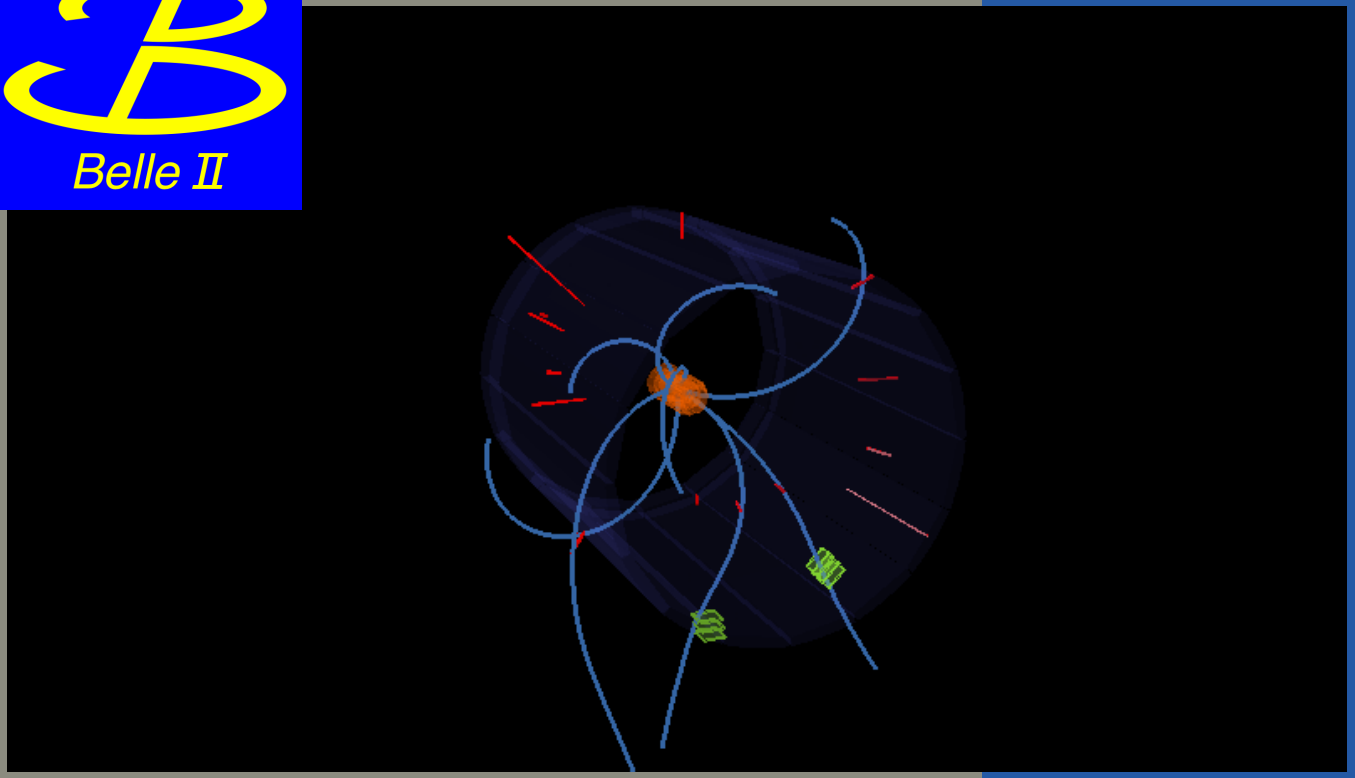

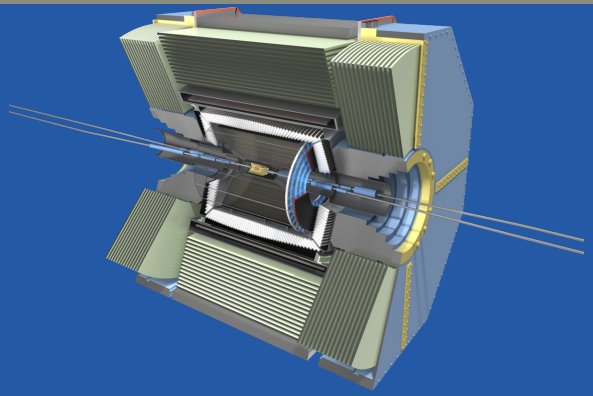

Ereignis 45

$\not{E} = 0.2$

$\nwarrow\!\!\searrow = 0.53$

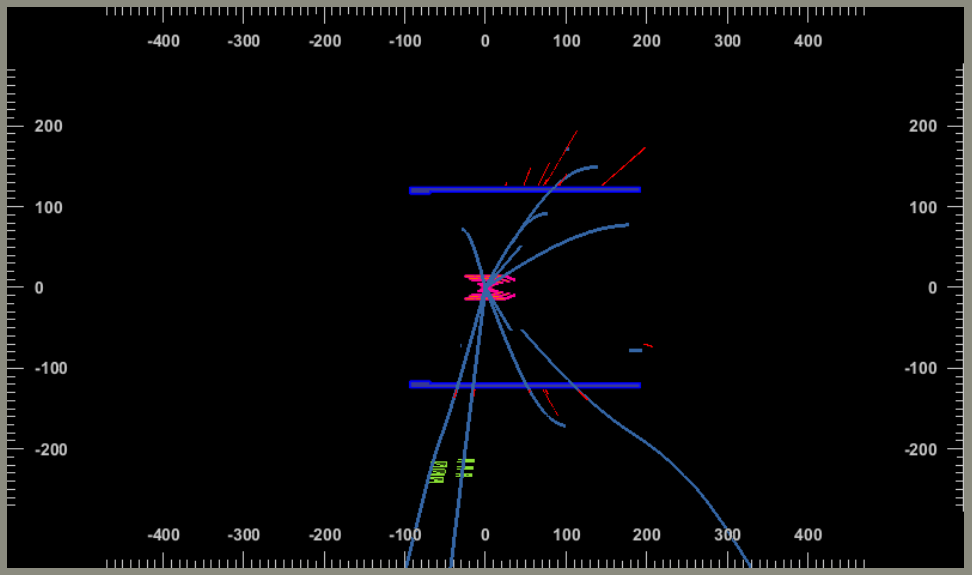

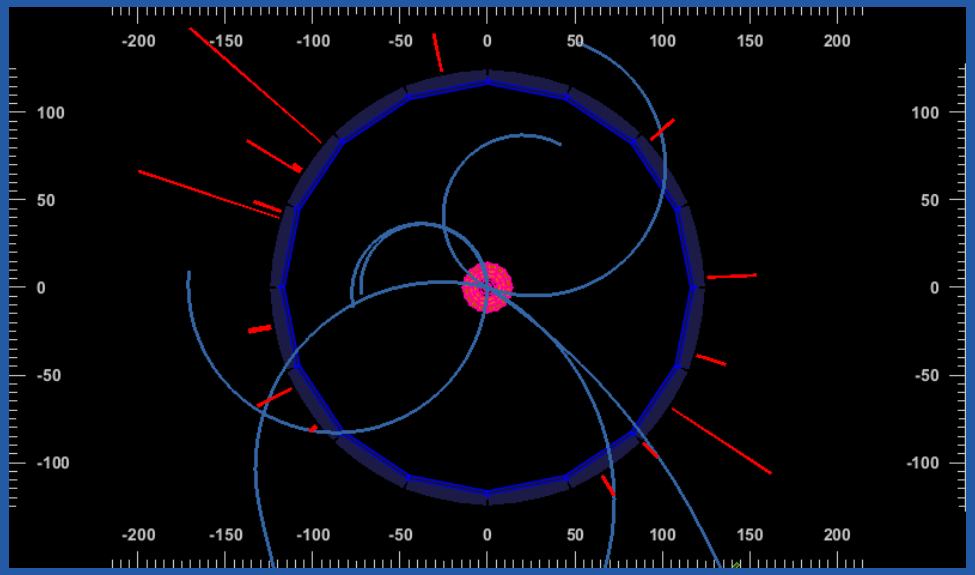

Belle II

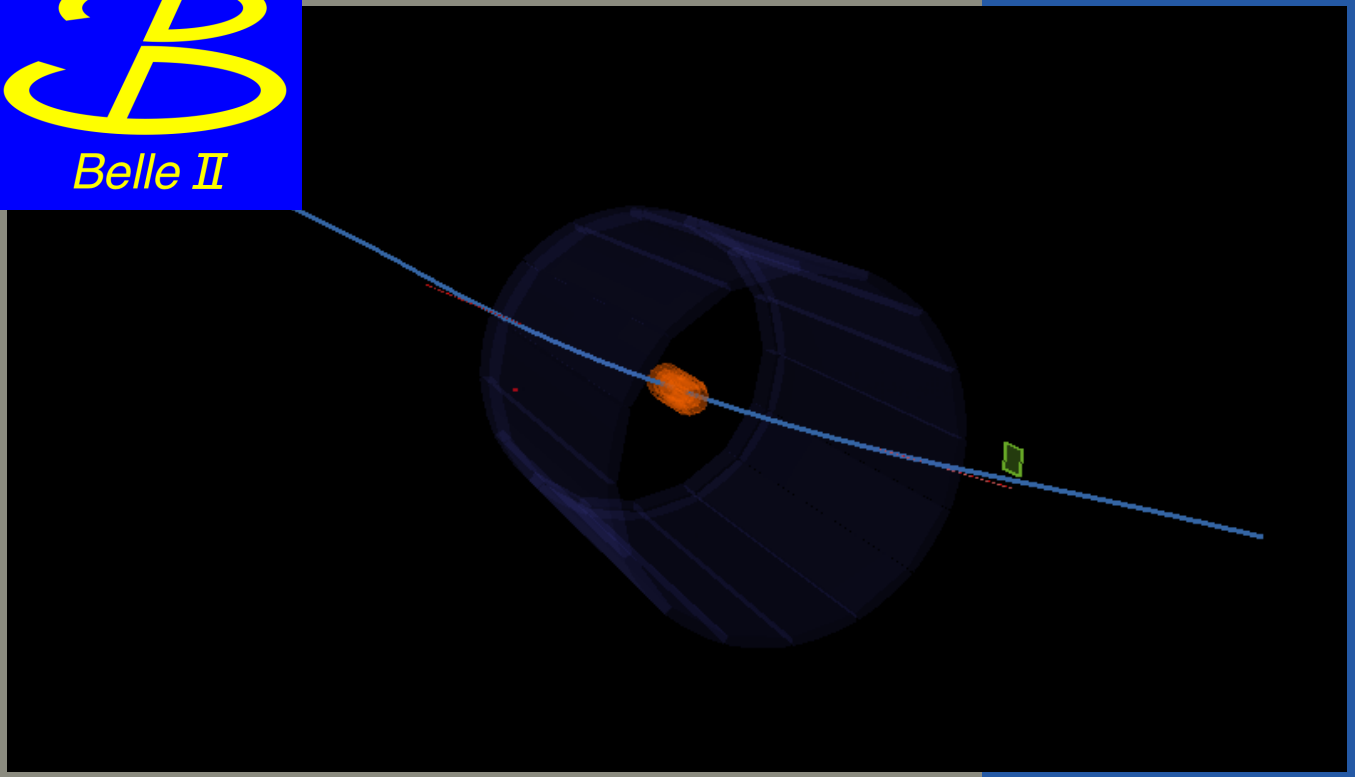

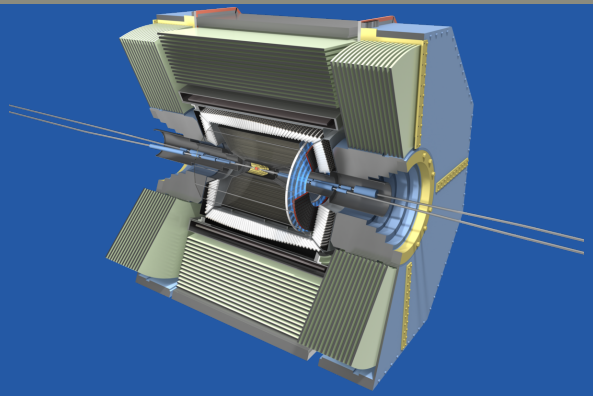

Ereignis 46

$\not{E} = 0.0$

$\nwarrow\!\!\searrow = 1.0$

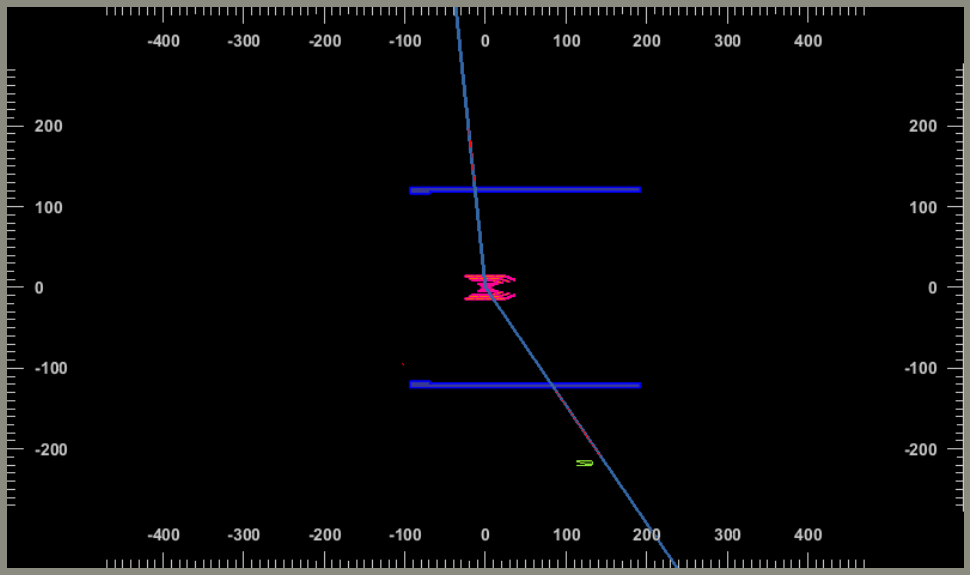

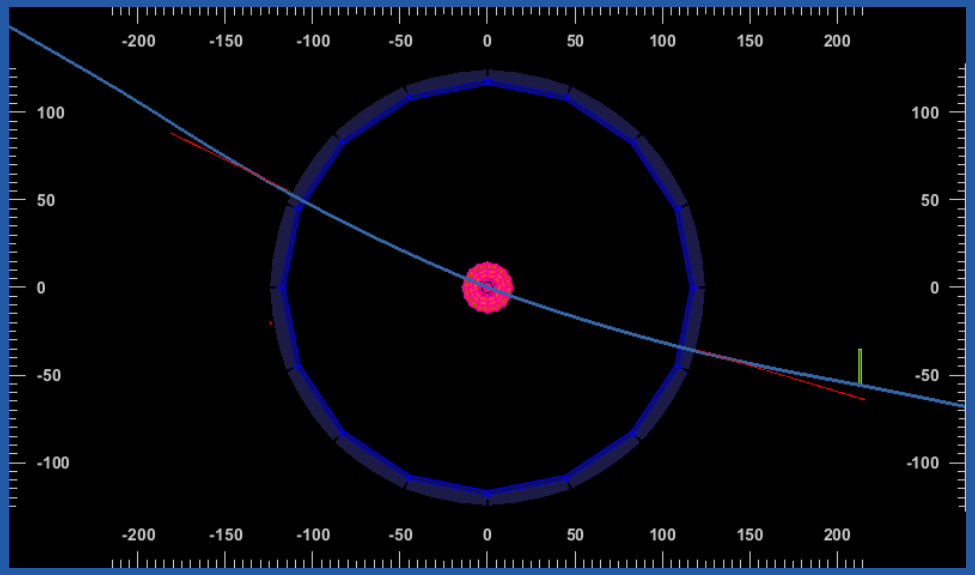

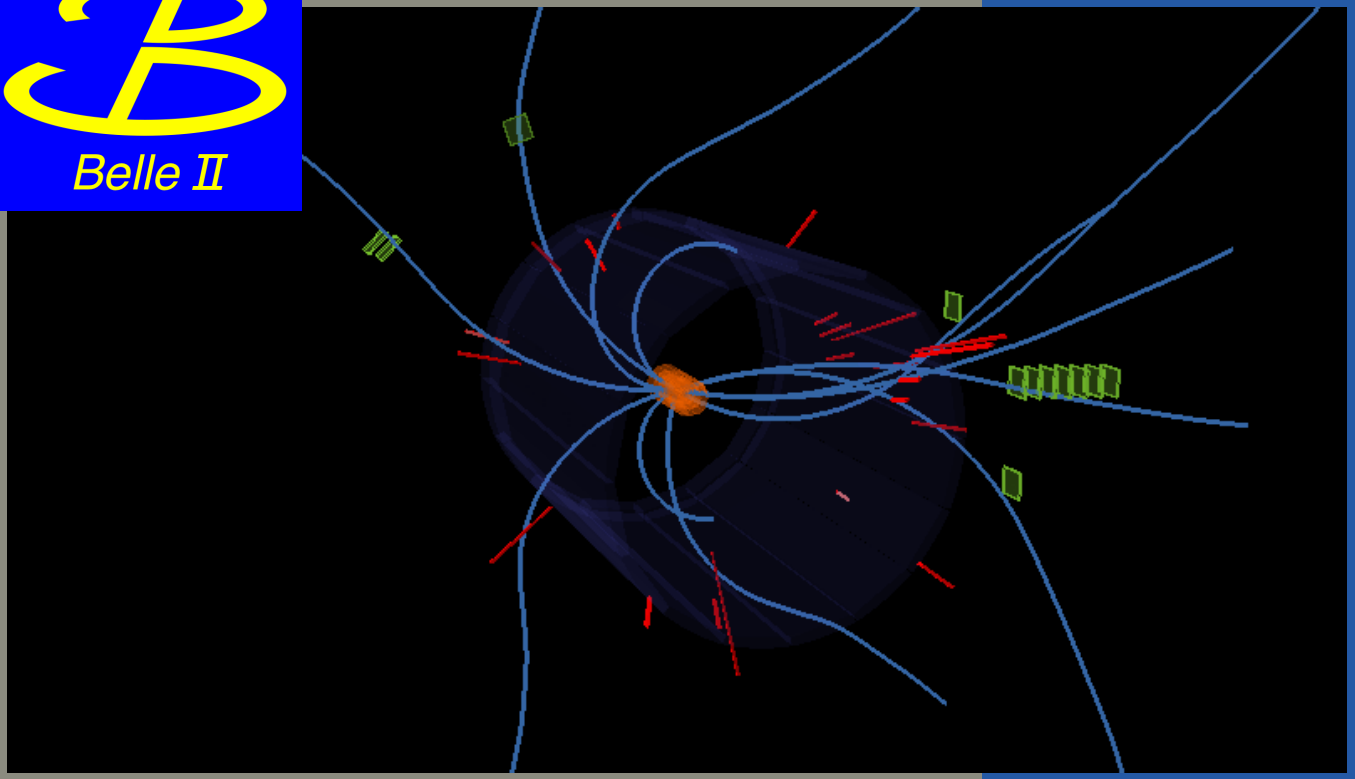

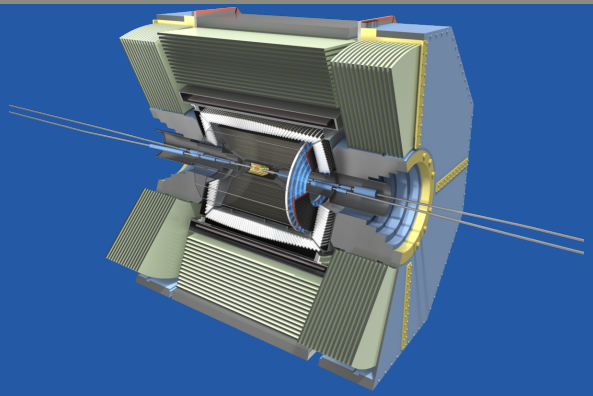

Ereignis 47

$\not{E} = 1.0$

$\nwarrow\!\!\searrow = 0.28$

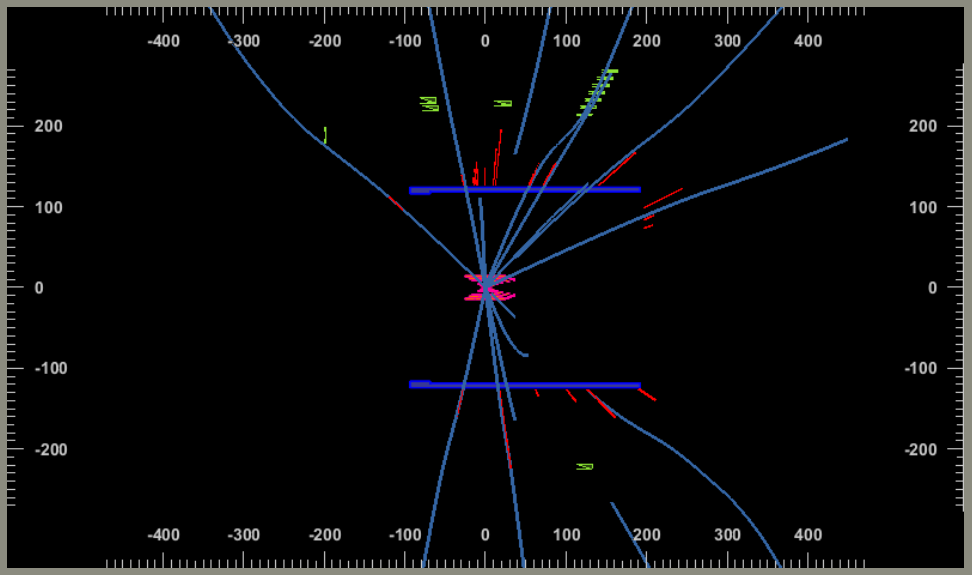

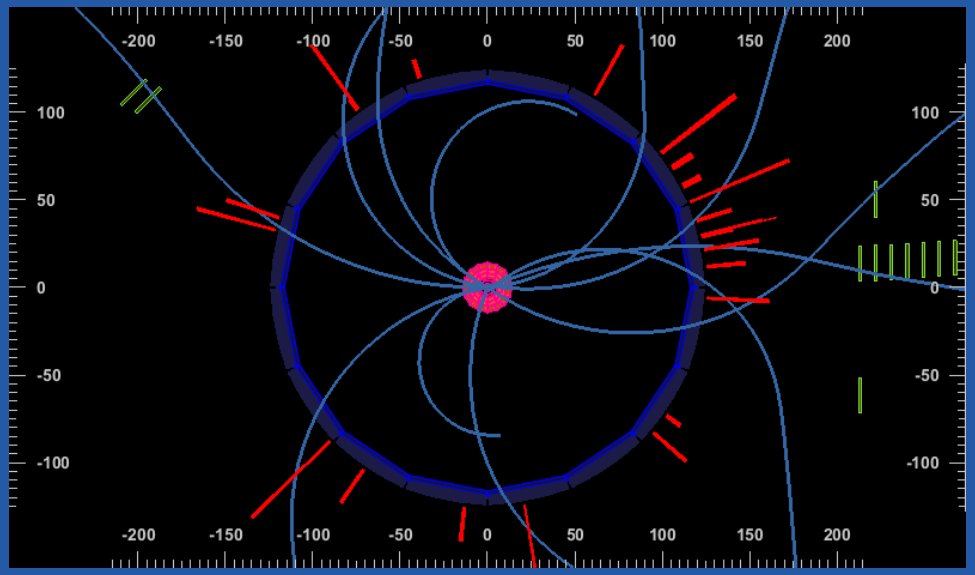

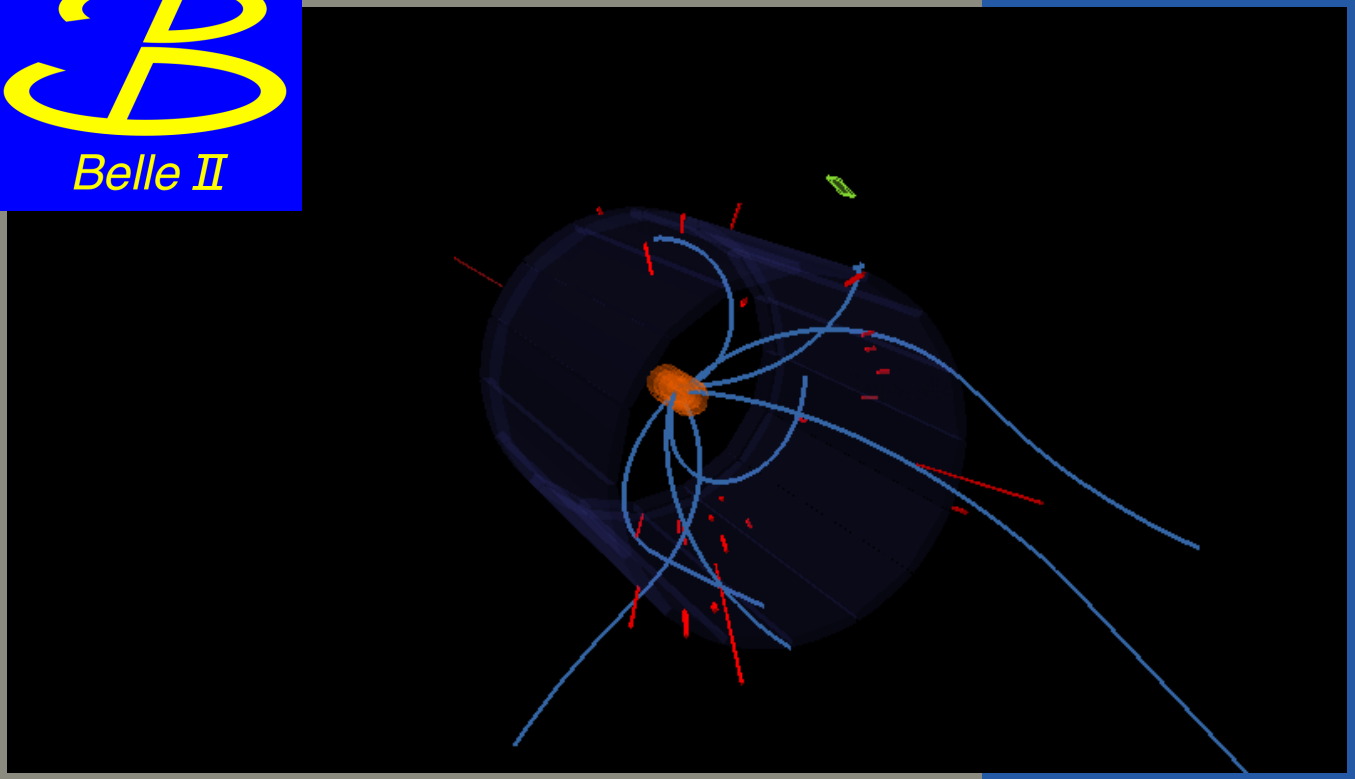

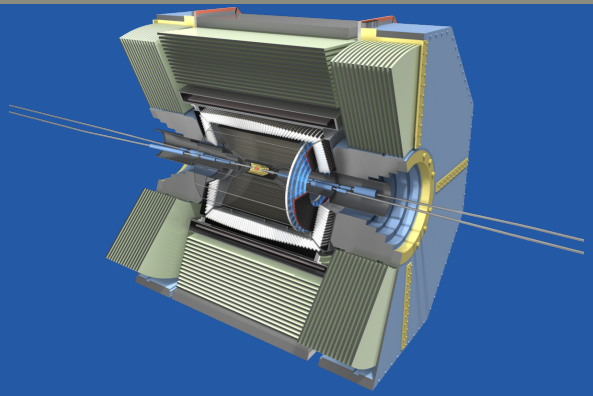

Ereignis 48

$\not{E} = 12.2$

$\nwarrow\!\!\searrow = 0.07$

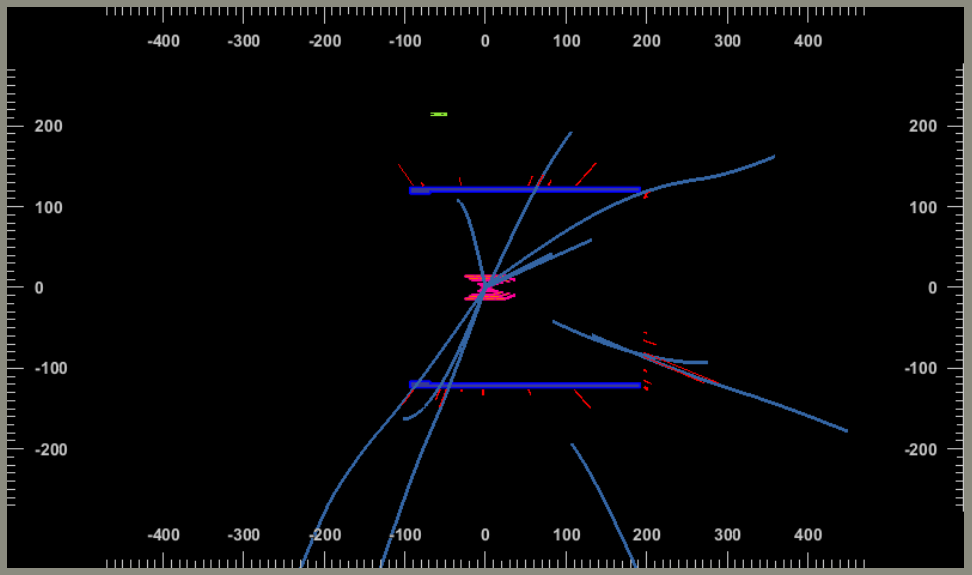

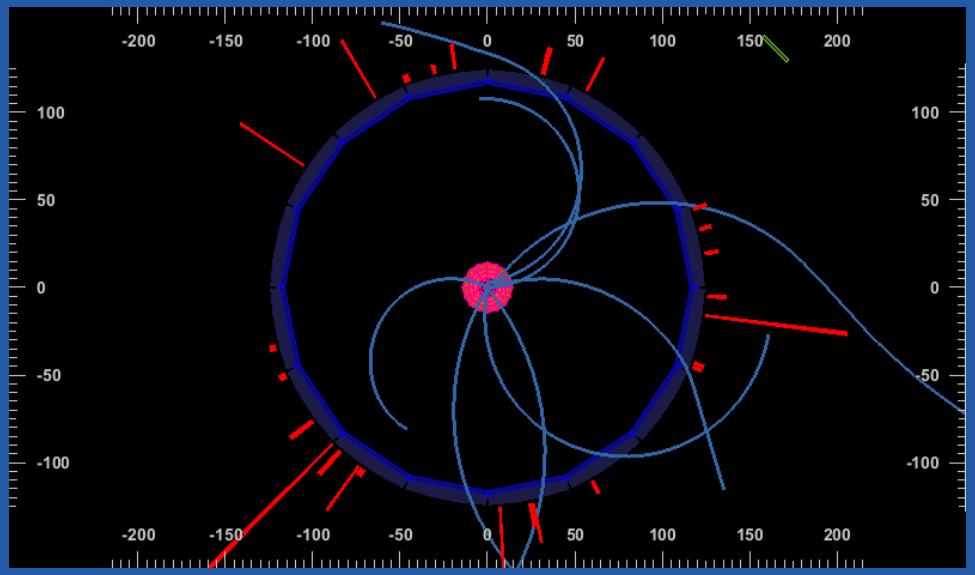

Belle II

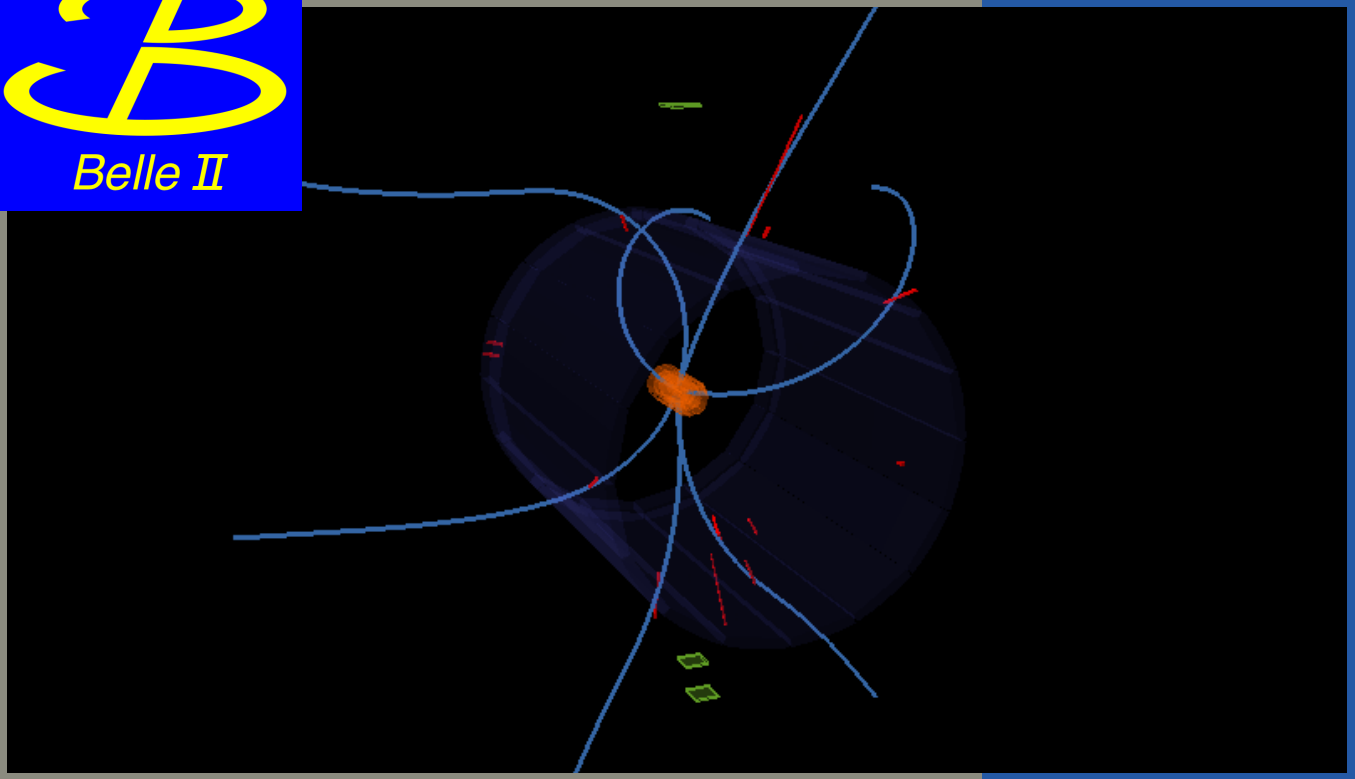

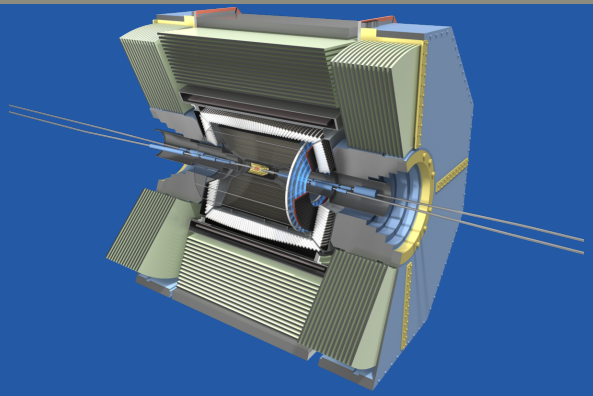

Ereignis 49

$\not{E} = -0.0$

$\nwarrow\!\!\searrow = 0.45$

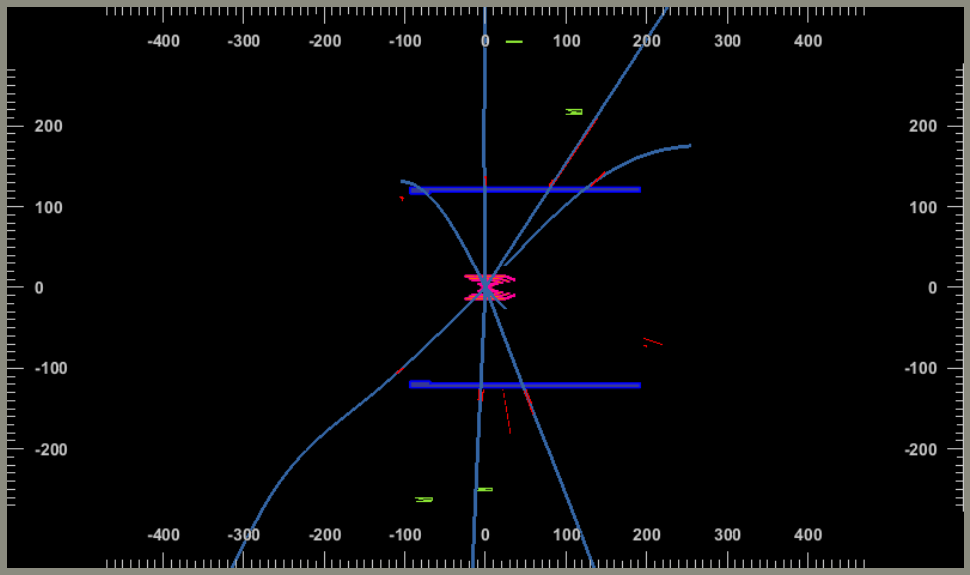

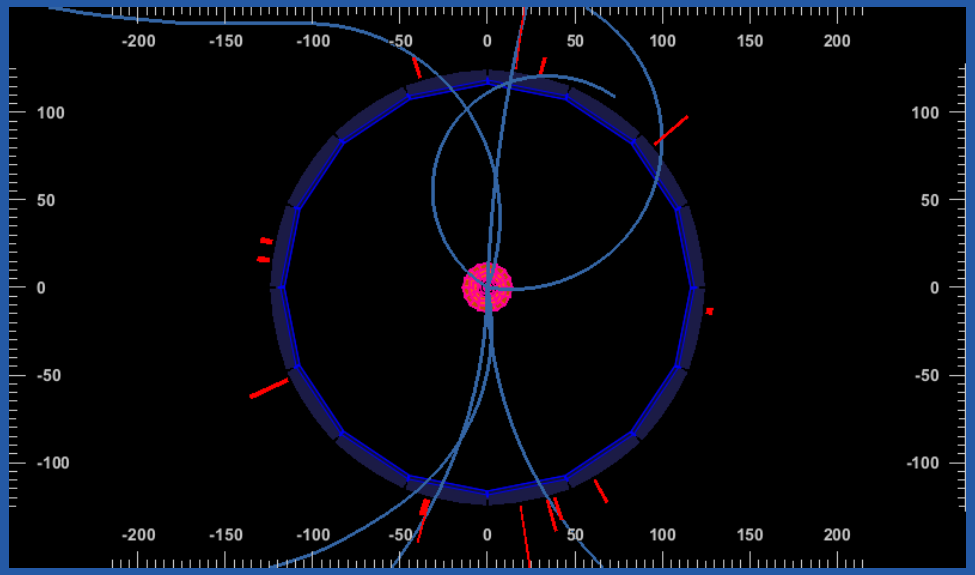

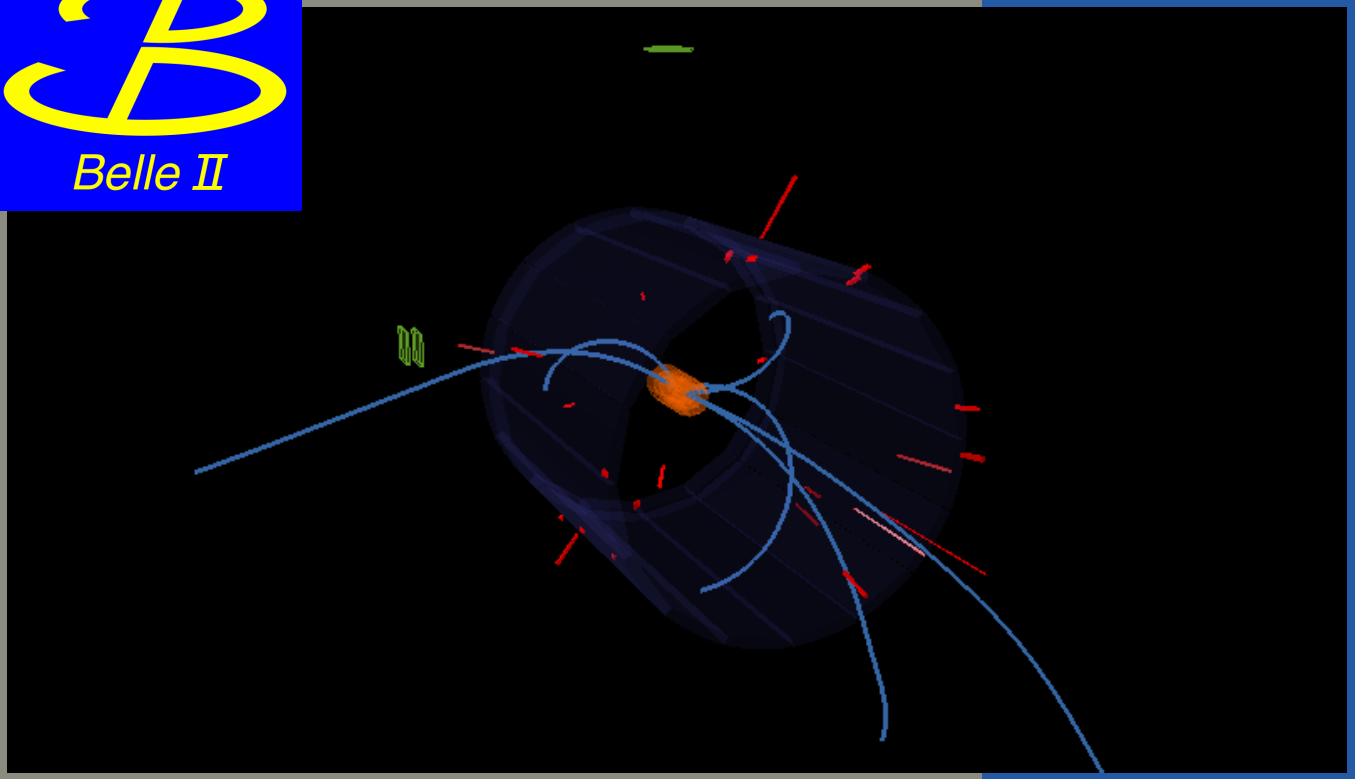

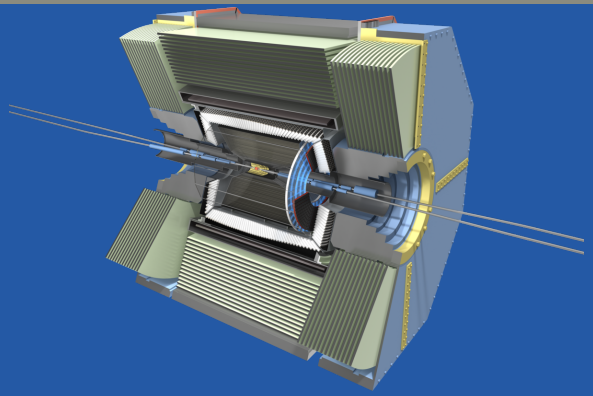

Ereignis 50

$\not{E} = 32.1$
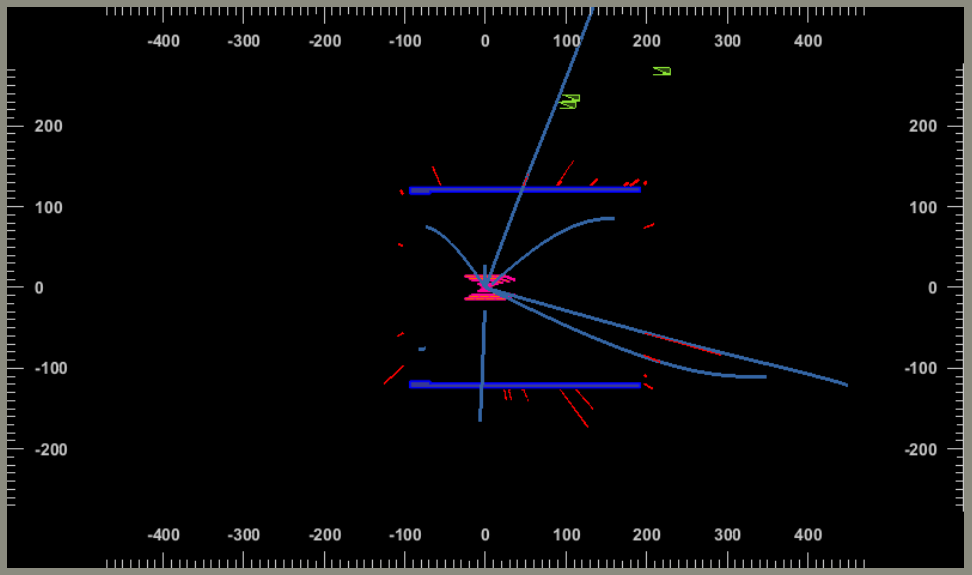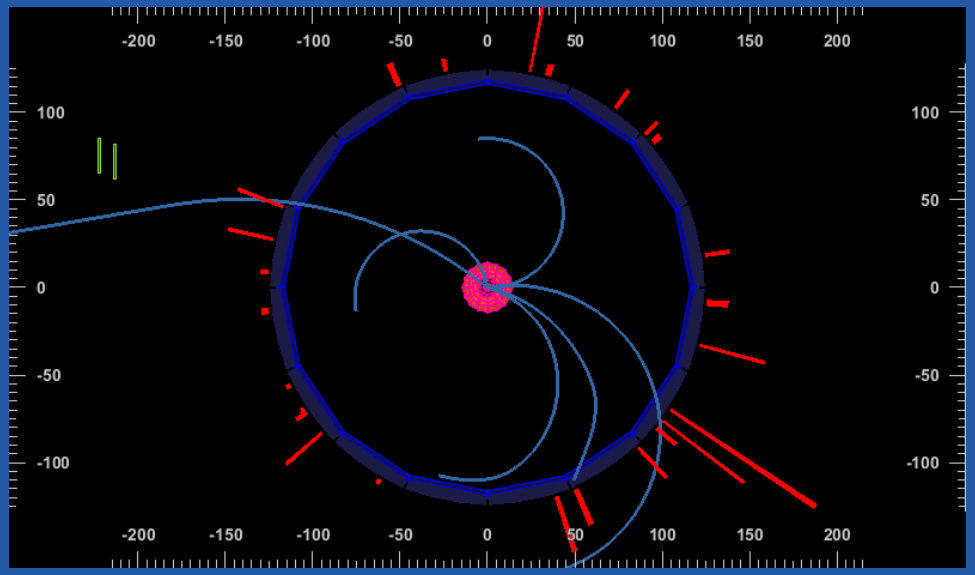
$\nwarrow\!\!\searrow = 0.14$